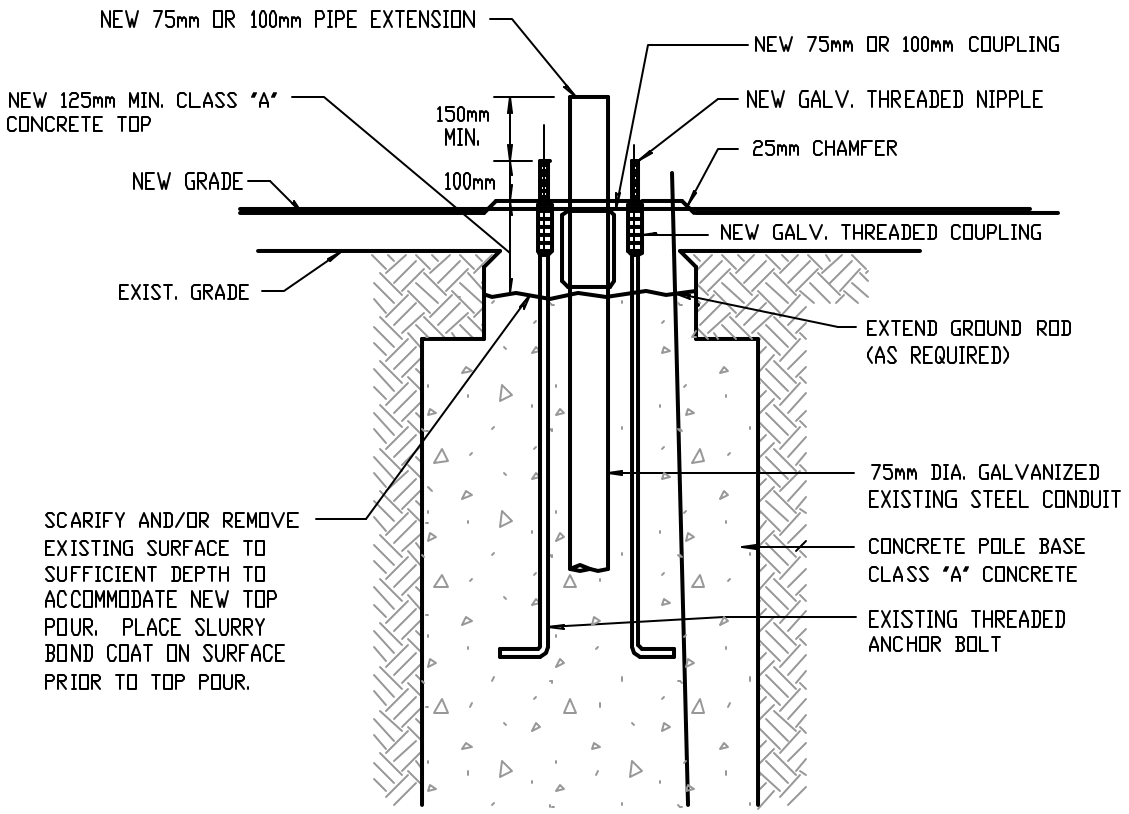

LIGHT POLE BASE EXTENSION SINGLE CONDUIT

NOT TO SCALE

4/1/98

REVISED