REVISED 4/1/98

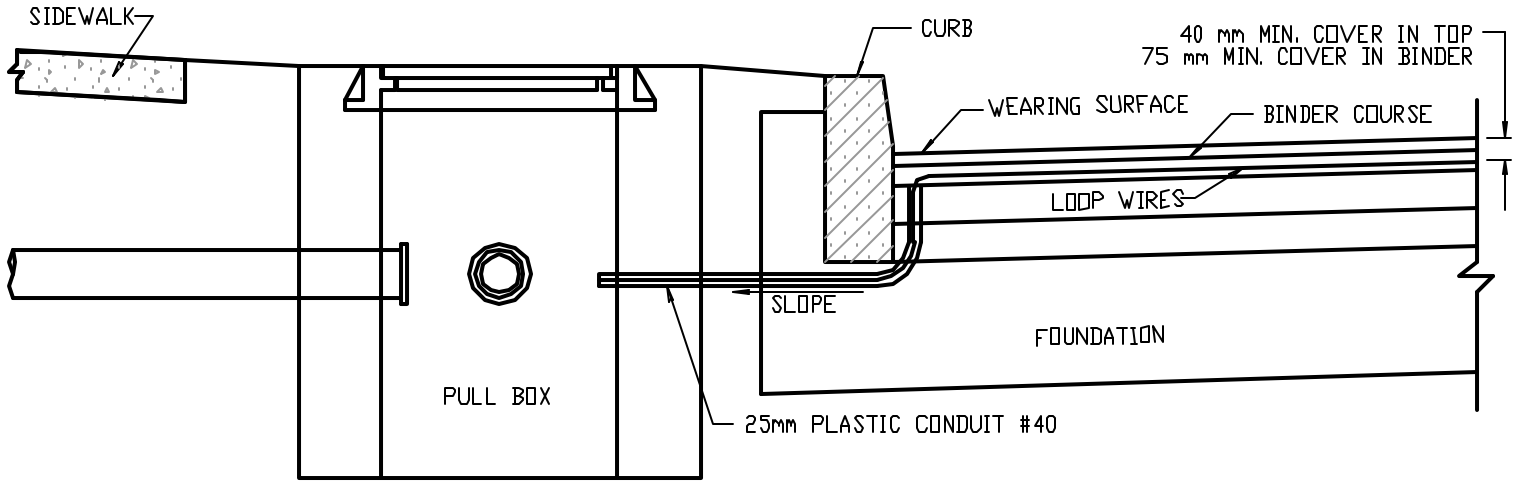

LOOP DETECTOR INSTALLATION TO PULL BOX

NOT TO SCALE