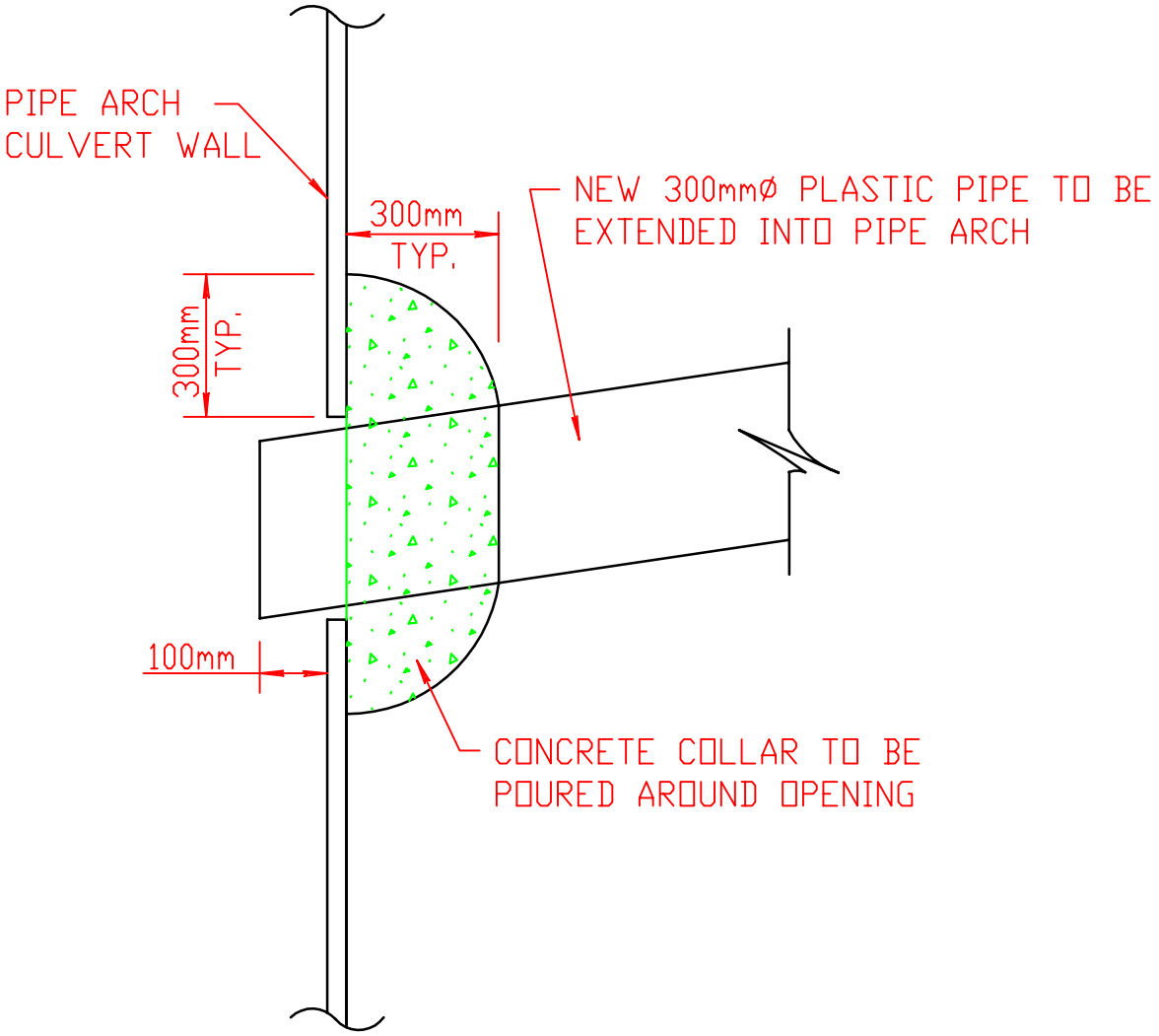

CONCRETE COLLAR DETAIL

NOT TO SCALE

4/1/98

REVISED