REVISED 4/1/98

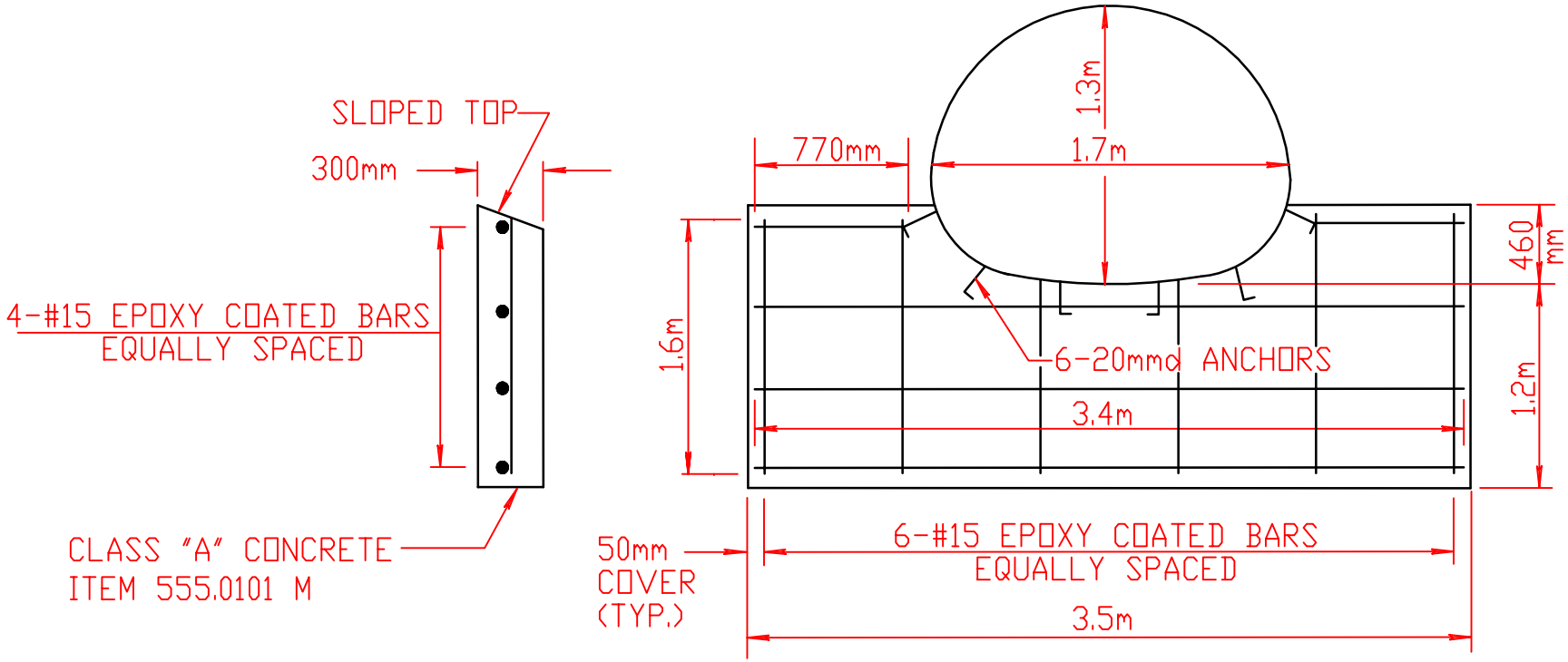

CUTOFF WALL DETAIL

NOT TO SCALE