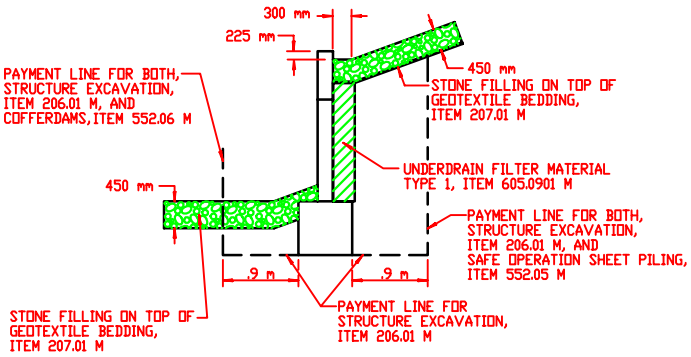

SECTION A – A
NOT TO SCALE

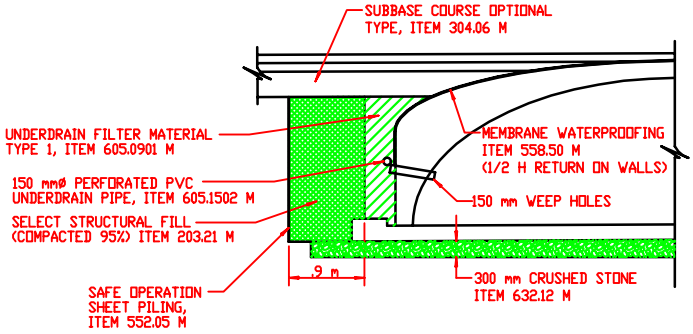

SECTION B – B
NOT TO SCALE

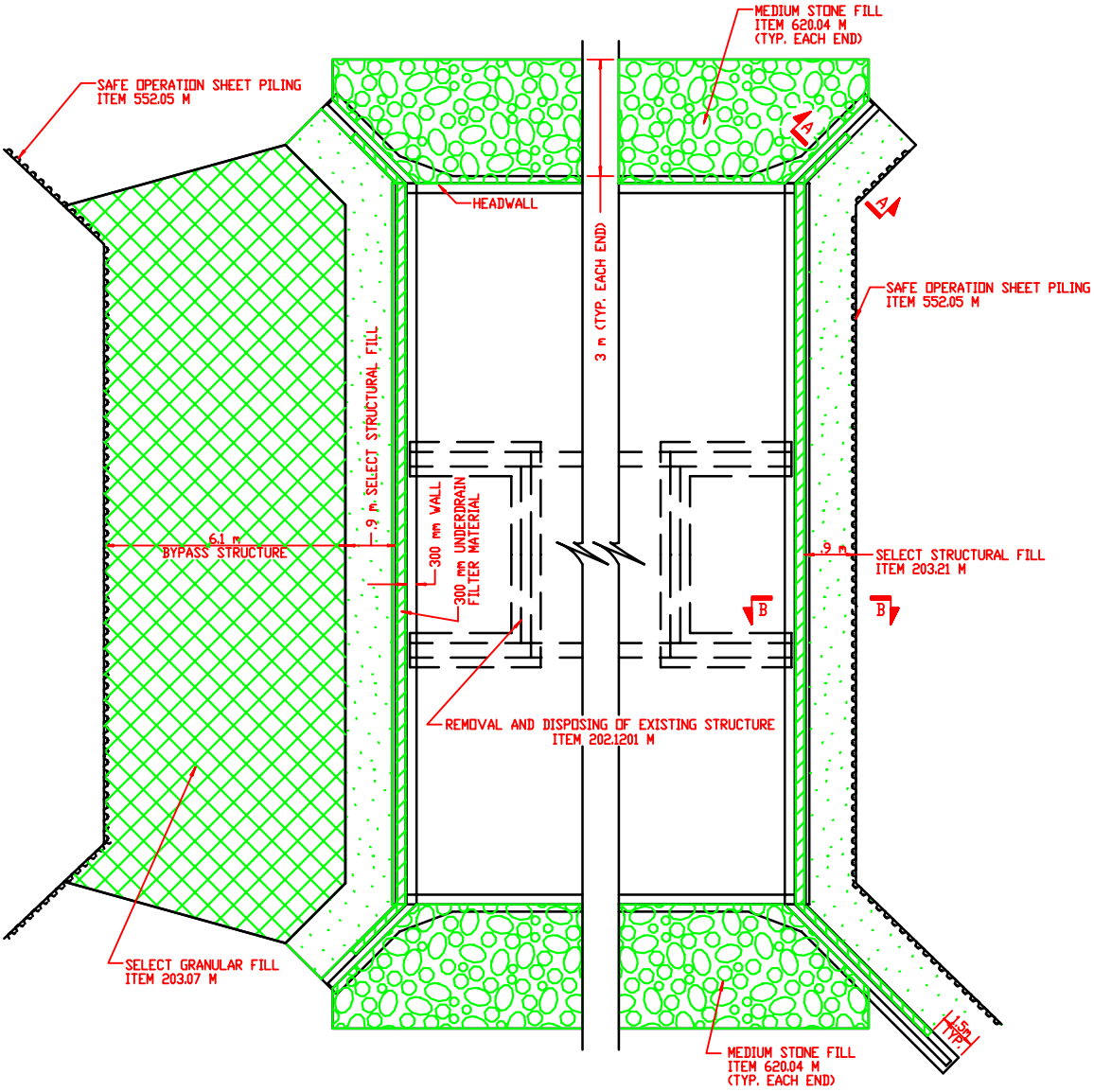

EXCAVATION AND BACKFILL PLAN
NOT TO SCALE

4/1/98

REVISED