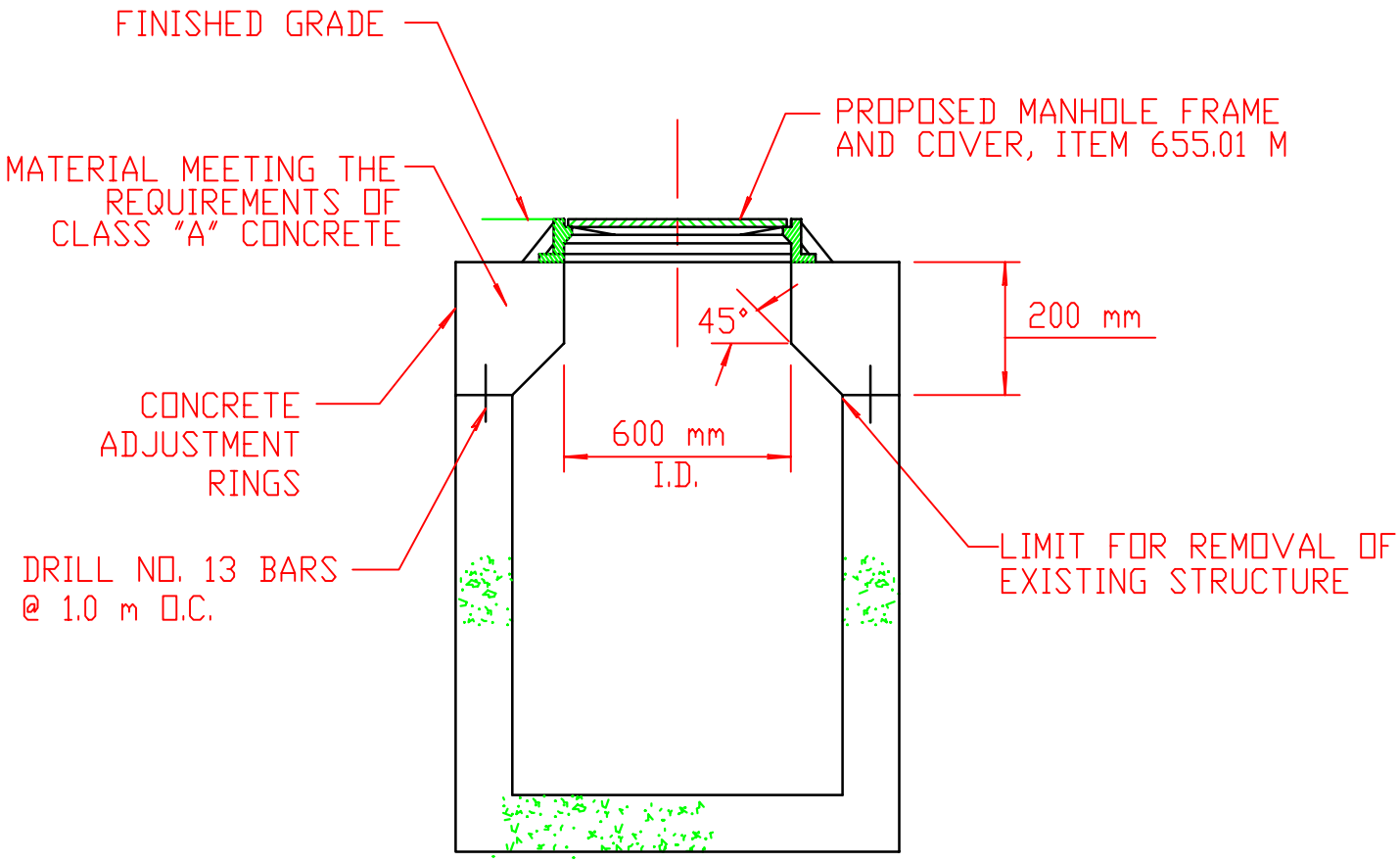

SECTION A-A

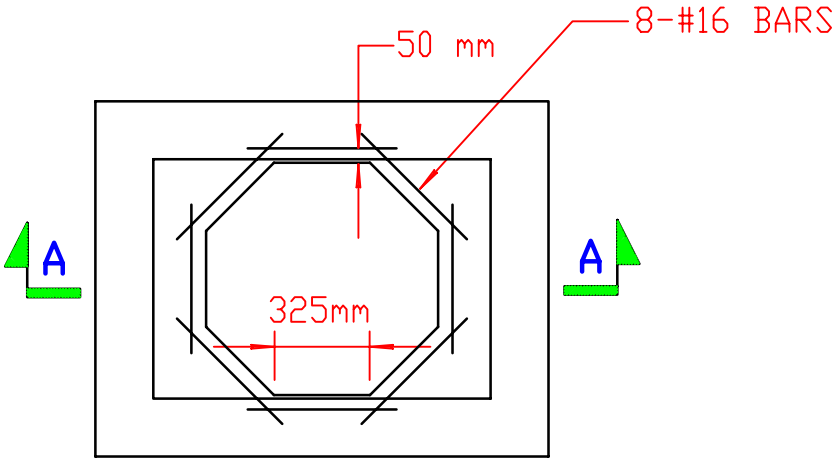

PLAN

ALTER EXISTING D.I. TO TYPE 'A' MANHOLE

ITEM 604.07 M

NOT TO SCALE

4/1/98

REVISED