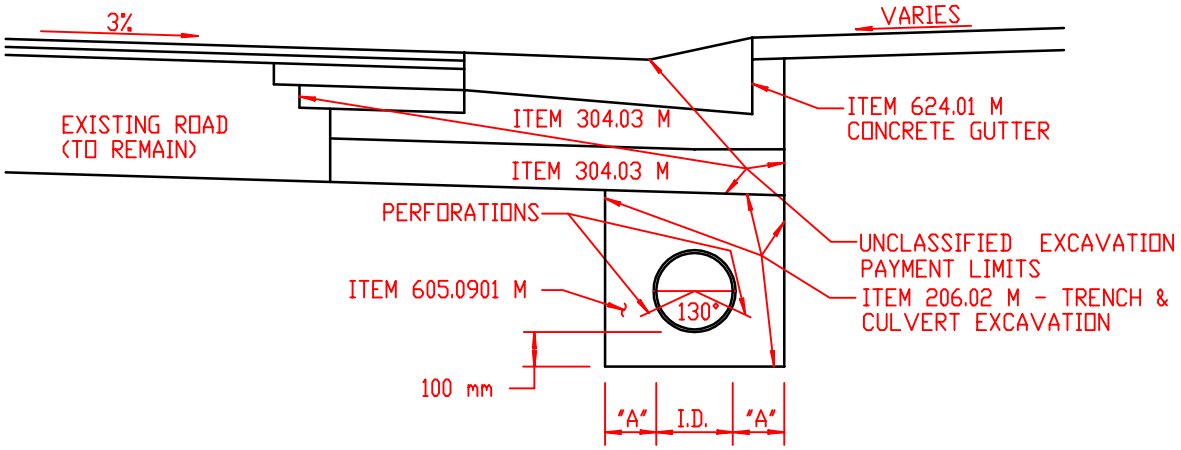

PIPE DIA.	DIM. "A"
UP TO 450 mm	300 mm
475 TO 900 mm	450 mm
OVER 900 mm	600 mm

CONCRETE GUTTER WITH PERFORATED STORM SEWER

NOT TO SCALE

01/01/01

REVISED