REVISED 4/1/98

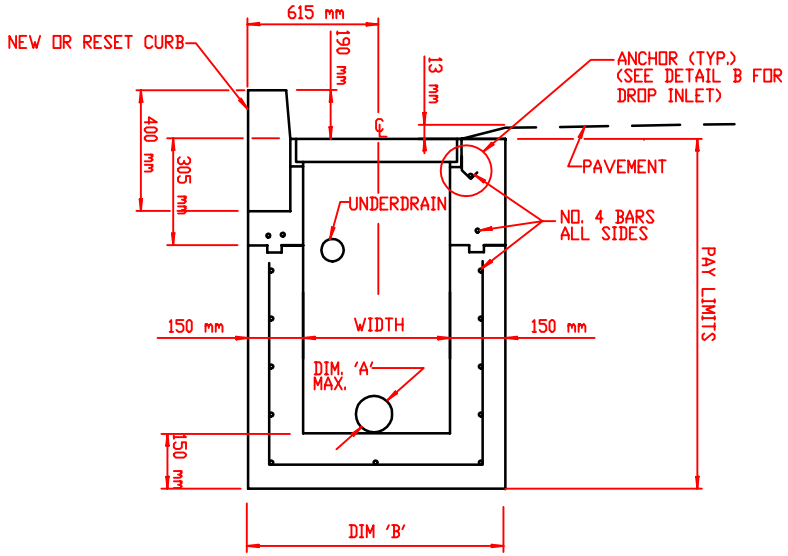

SECTION A-A
NOT TO SCALE.

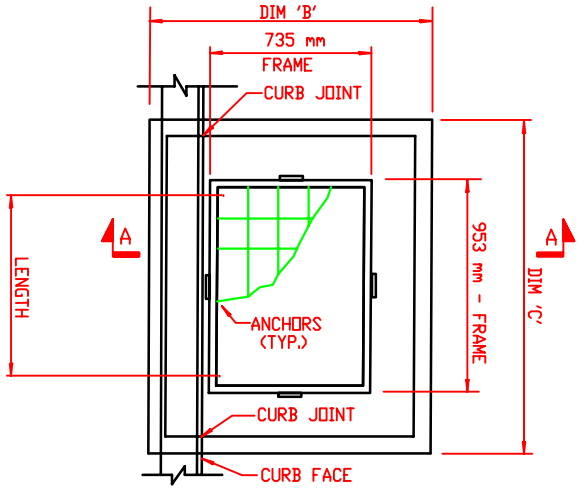

PLAN
NOT TO SCALE.

DROP INLET TYPE 'C' (AGAINST CURB)

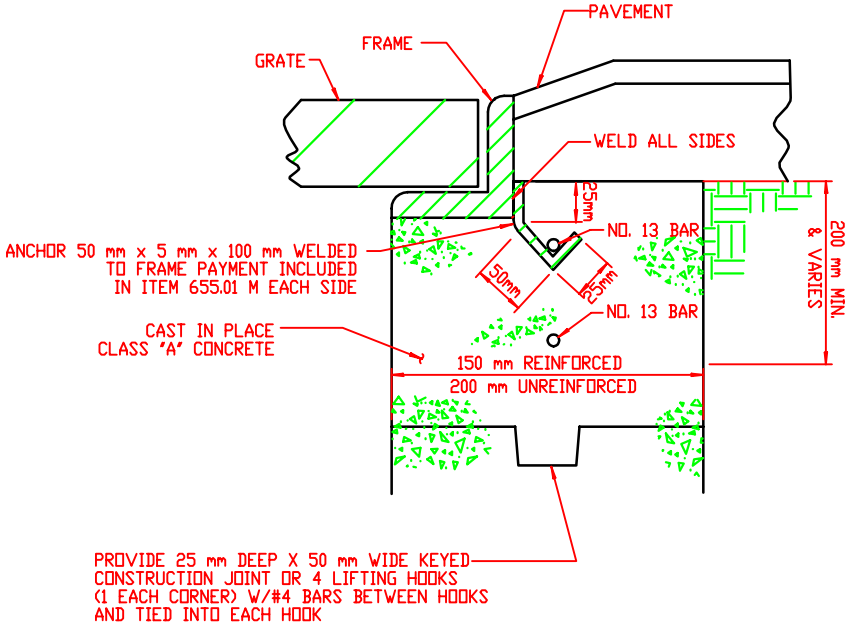

DETAIL B FOR DROP INLET
NOT TO SCALE

NOTES:

1. ITEM 655.02 M - FRAME AND GRATE
   FRAME 735 mm X 953 mm
   GRATE 703 mm X 927 mm
   RECTANGULAR FRAME AND GRATE ASSEMBLY
   TYPE II NYSDOT STANDARD SHEET M655-6 PAYMENT AREA = 0.67 sq. m.
2. THE COST OF ALL BAR REINFORCEMENT SHALL BE INCLUDED IN THE BID PRICE FOR DROP INLETS. BAR REINFORCEMENT SHALL HAVE A COVER OF 50mm UNLESS OTHERWISE SHOWN.
3. ALL CONCRETE FOR DROP INLETS SHALL BE CLASS 'A'.
4. FILL WITH CEMENT MORTAR AND SEAL WITH ASPHALT EMULSION TACK COAT BETWEEN FRAME AND CURB. PAYMENT SHALL BE INCLUDED IN THE APPROPRIATE CURB ITEM.
5. THE INTERIOR AND EXTERIOR OF ALL DROP INLETS SHALL BE COATED WITH TWO COATS OF KOPPERS SUPER SERVICE BLACK OR APPROVED EQUAL.
6. STEPS ARE REQUIRED FOR ANY STRUCTURE DEEPER THAN 1.2 m AND SHALL CONFORM TO MATERIAL SPECIFICATION 755-02.01. THE COST OF THE STEPS SHALL BE INCLUDED IN THE BID PRICE FOR DROP INLETS.

TYPE	ITEM NUMBER	WIDTH	LENGTH	DIM 'A'	DIM 'B'	DIM 'C'
C	604.050202 M	915 mm	915 mm	750 mm MAX	1215 mm	1215 mm