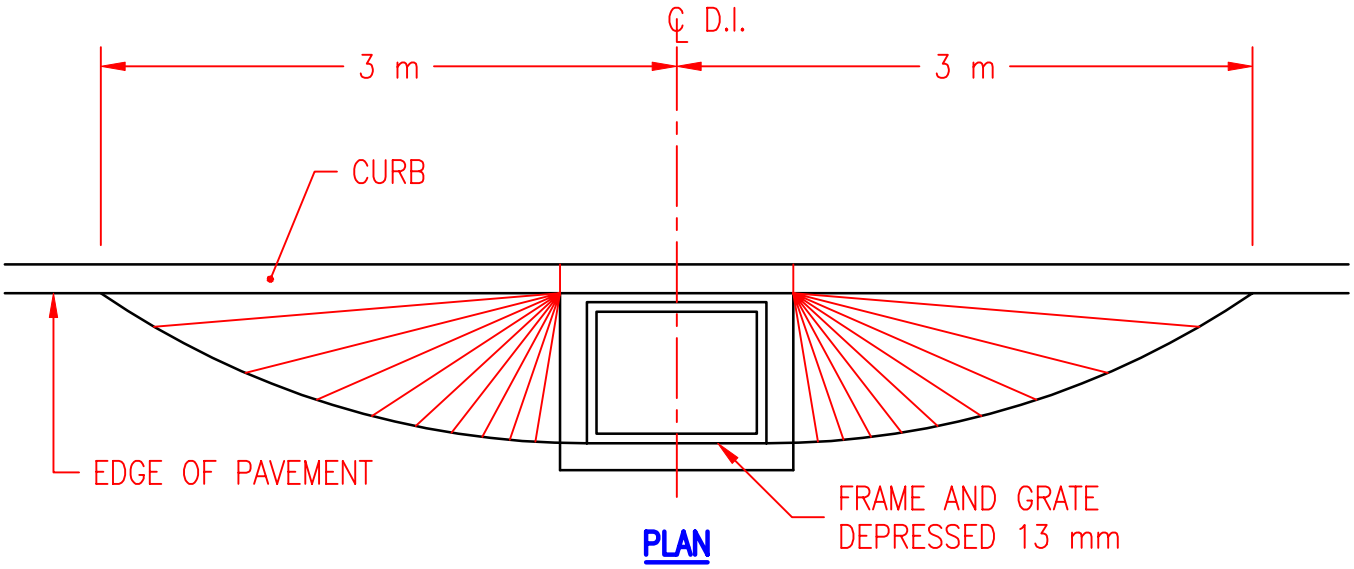

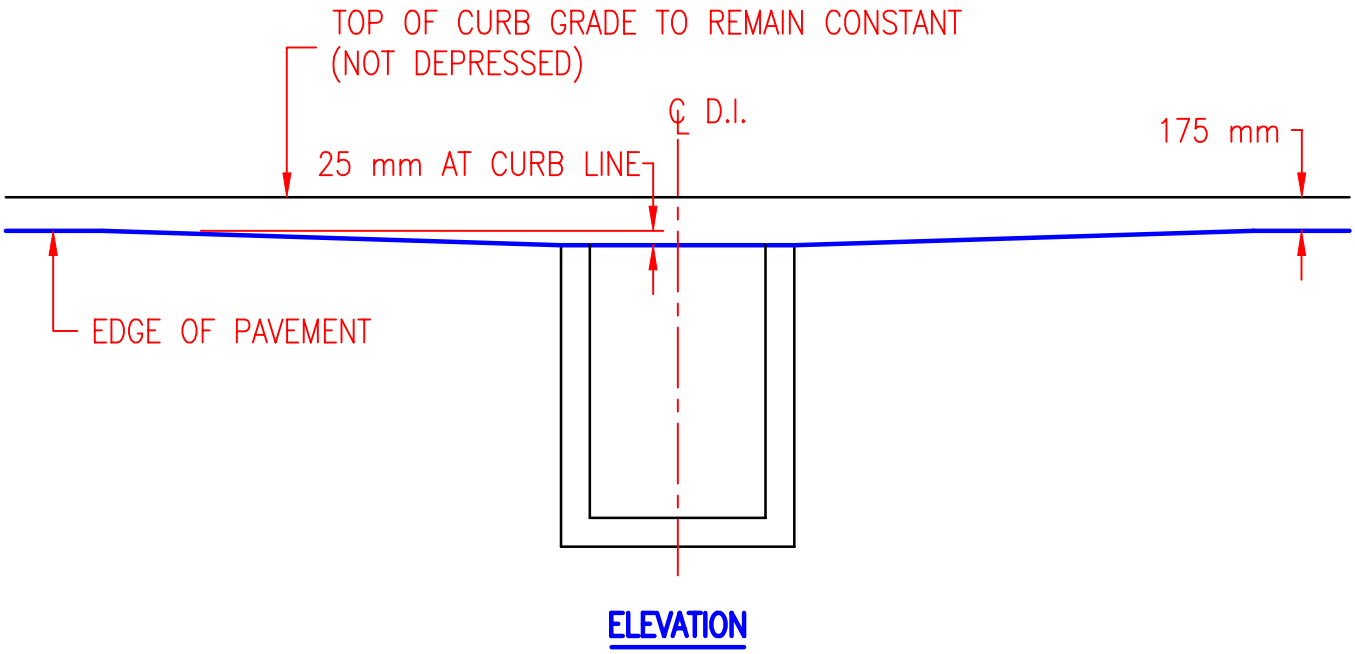

DEPRESSED INLET PAVING

NOT TO SCALE

3/9/99

REVISED