NOTES:

1. PRECAST CONCRETE COVER TO BE SET IN PLACE, NOT MORTARED IN PLACE. CONCRETE SHALL BE CLASS "A" AND SHALL CONFORM TO SECTION 555 OF THE SPECIFICATIONS.
2. THE COST OF THE PRECAST CONCRETE COVER, INCLUDING BAR REINFORCEMENT SHALL BE INCLUDED IN THE PRICE BID FOR DROP INLETS.
3. BAR REINFORCEMENT SHALL CONFORM TO MATERIAL SPECIFICATION 709-01 AND SHALL BE EPOXY COATED.

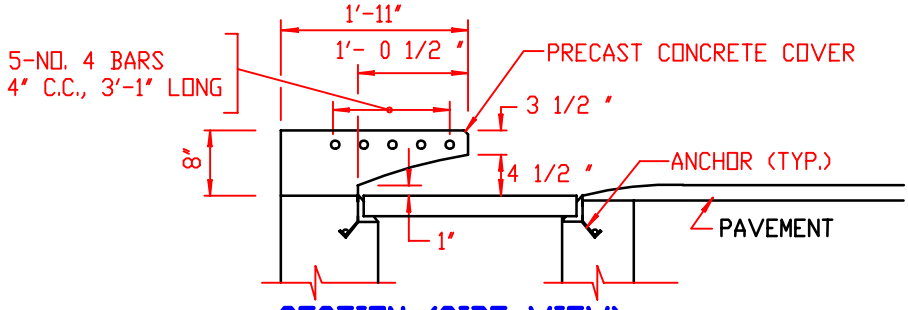

SECTION (SIDE VIEW)

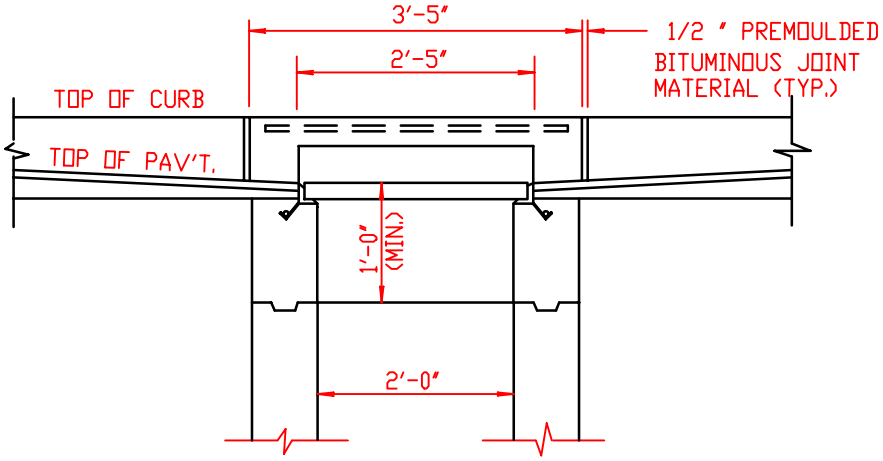

PERPENDICULAR PLACEMENT SECTION (FRONT VIEW)

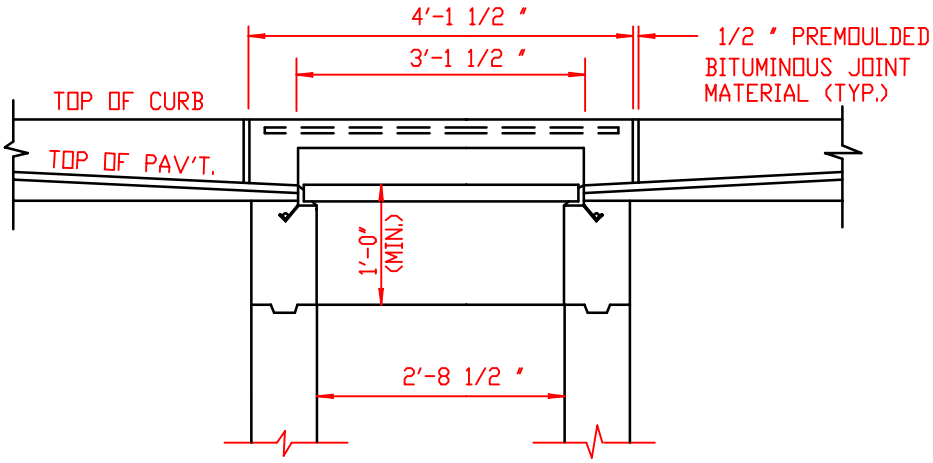

PARALLEL PLACEMENT SECTION (FRONT VIEW)

CAPSTONE PRECAST FOR DROP INLET TYPE "S" (ENGLISH)

NOT TO SCALE

11/30/99

REVISED