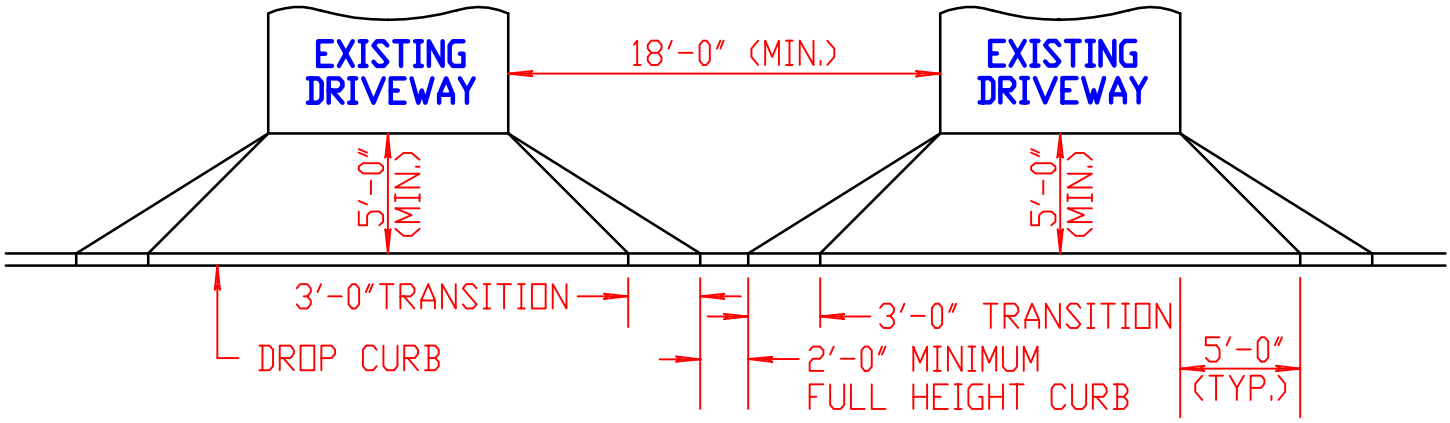


IF DISTANCE BETWEEN TWO ADJACENT DRIVEWAYS IS LESS THAN 18'-0", REDUCE THE 5'-0" FLARES TO ALLOW FOR A MINIMUM OF 2'-0" OF FULL HEIGHT CURB BETWEEN TRANSITIONS. IF DISTANCE BETWEEN DRIVEWAYS IS LESS THAN 8'-0", THE TRANSITIONS AND 2'-0" OF FULL HEIGHT CURB WILL NOT FIT. IN THIS INSTANCE, SPECIAL DETAILS MAY BE REQUIRED. IN INSTANCES WHERE THE DISTANCE SEPARATING DRIVEWAYS IS BETWEEN 8'-0" AND 18'-0", USE THE DETAIL BELOW:

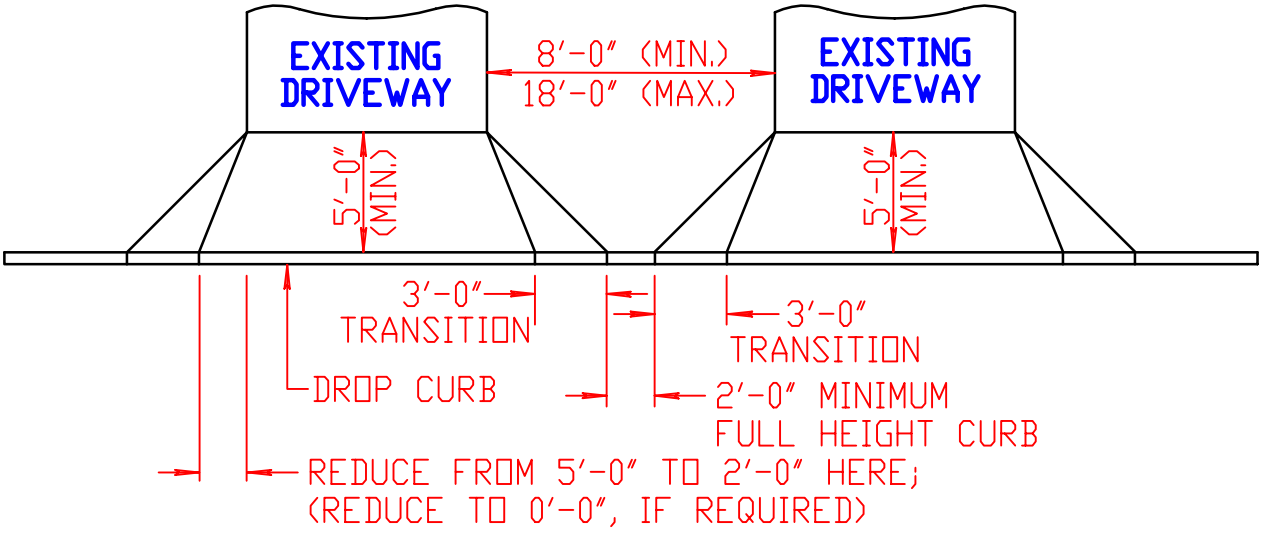


# NEIGHBORING DRIVEWAYS TO A COUNTY HIGHWAY WITH CURB

**NOT TO SCALE**

10/1/00

REVISED