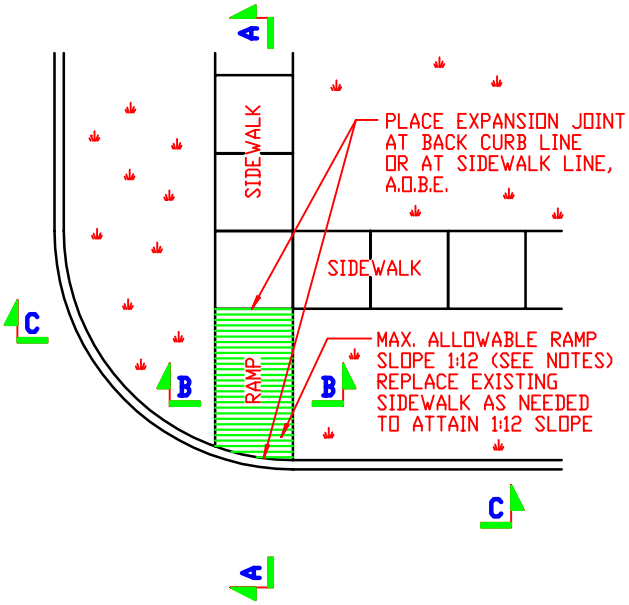

PLAN

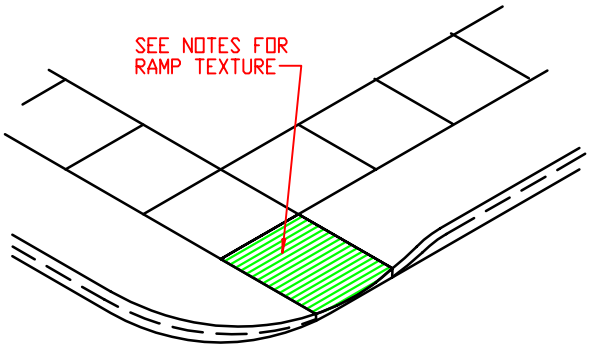

PLAN VIEW

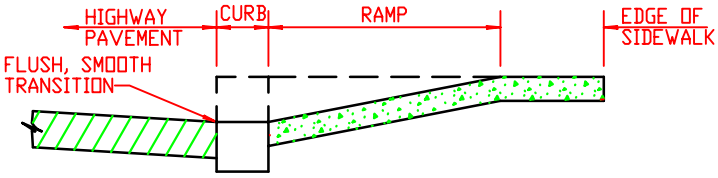

SECTION A - A

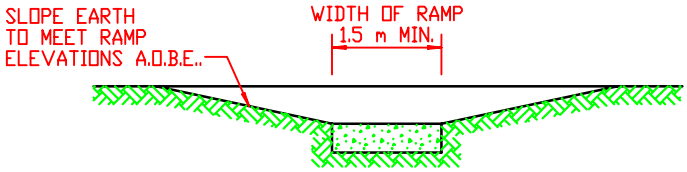

SECTION B - B

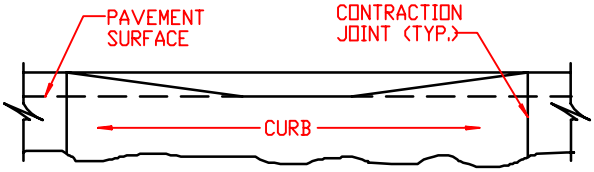

SECTION C - C

SIDEWALK RAMP
TYPE 1

NOT TO SCALE

4/1/98

REVISED