REVISED 1/1/01

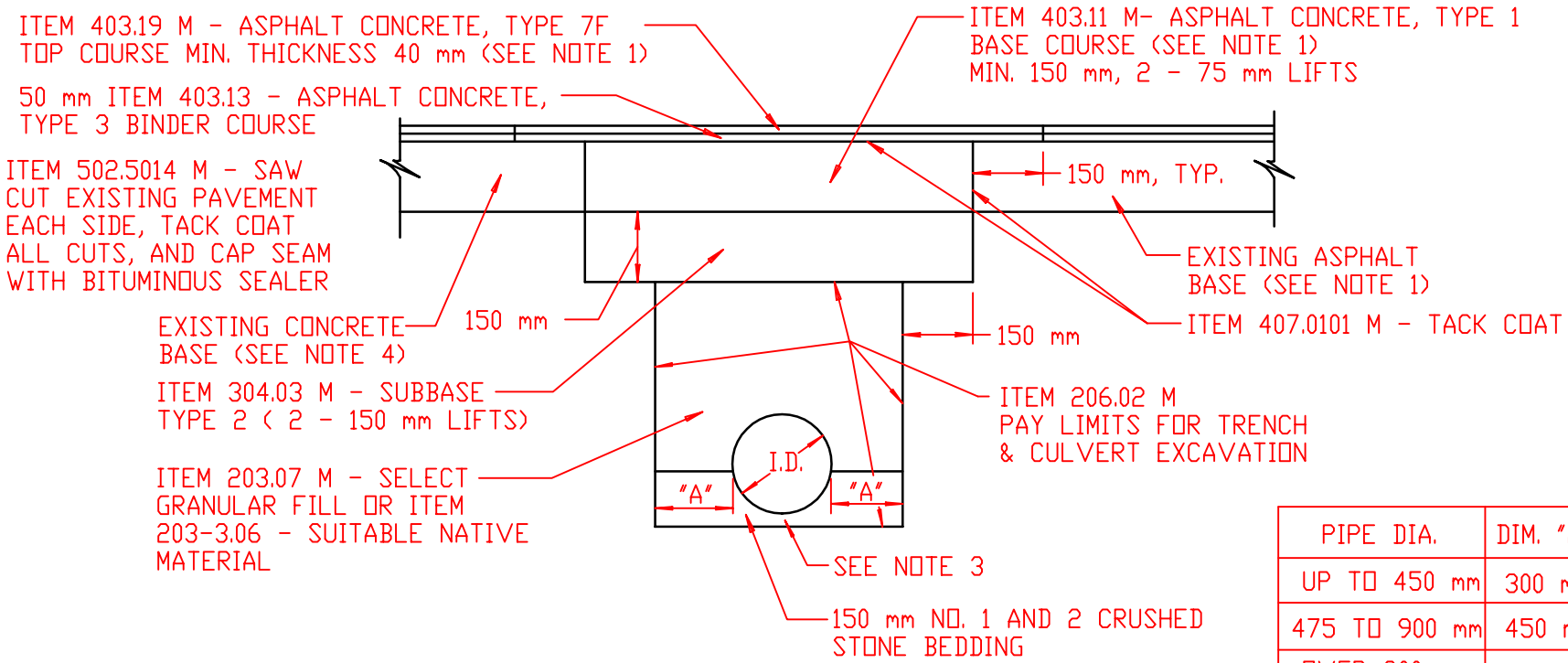

PIPE DIA.	DIM. "A"
UP TO 450 mm	300 mm
475 TO 900 mm	450 mm
OVER 900 mm	600 mm

1. REPLACE PAVEMENT IN KIND WITH WHAT IS EXISTING, UNLESS CONDITIONS EXIST WHERE THAT ISN'T FEASIBLE, THEN INSTALL SECTION AS APPROVED BY THE DEPARTMENT'S ENGINEER OR HIGHWAY MAINTENANCE MANAGER. THE MINIMUM APPROVABLE SECTION SHALL BE 150 mm OF ITEM 304.03 M TYPE 2 SUBBASE (CRUSHER RUN STONE), 50 mm OF ITEM 403.13 M TYPE 3 BINDER AND 40 mm OF ITEM 403.19 M TYPE 7F TOP. SEE NOTE #7 FOR TRENCHES LESS THAN 600 mm IN WIDTH.
2. SELECT GRANULAR FILL OR SUITABLE NATIVE MATERIAL, AS APPROVED BY THE DEPARTMENT'S ENGINEER OR HIGHWAY MAINTENANCE MANAGER, SHALL BE COMPACTED IN A MAXIMUM OF 150 mm LIFTS AT 95% COMPACTION.
3. 150 mm OF STONE BEDDING, CONSISTING OF A BLENDING OF #1 AND 2 STONE, IS REQUIRED FOR SANITARY OR STORM SEWER INSTALLATIONS WITH CRUSHED STONE HAUNCHING TO A MINIMUM OF 1/2 OF THE PIPE DIAMETER ON THE SIDE OF THE PIPE.
4. IF CONCRETE BASE IS EXISTING, IT MUST BE REPLACED WITH A MINIMUM OF 150 mm OF ASPHALT BASE.
5. REMOVE EXISTING PAVEMENT AND PAVEMENT BASE UNDER ITEMS 203.01 M OR 203.02 M.
6. IF PAVEMENT MARKINGS OR SIGNAL LOOPS ARE DESTROYED, THEY MUST BE REPLACED.
7. WHEN TRENCH WIDTH IS LESS THAN 600 mm, FLOWABLE FILL MUST BE PLACED ABOVE THE 150 mm OF #1 AND 2 STONE BEDDING TO BINDER GRADE. A 50 mm LIFT OF BINDER AND A 40 mm LIFT OF TOP ASPHALT MUST THEN BE INSTALLED TO FINISH GRADE.

TRENCH AND PAVEMENT RESTORATION FOR ROAD CUT

NOT TO SCALE