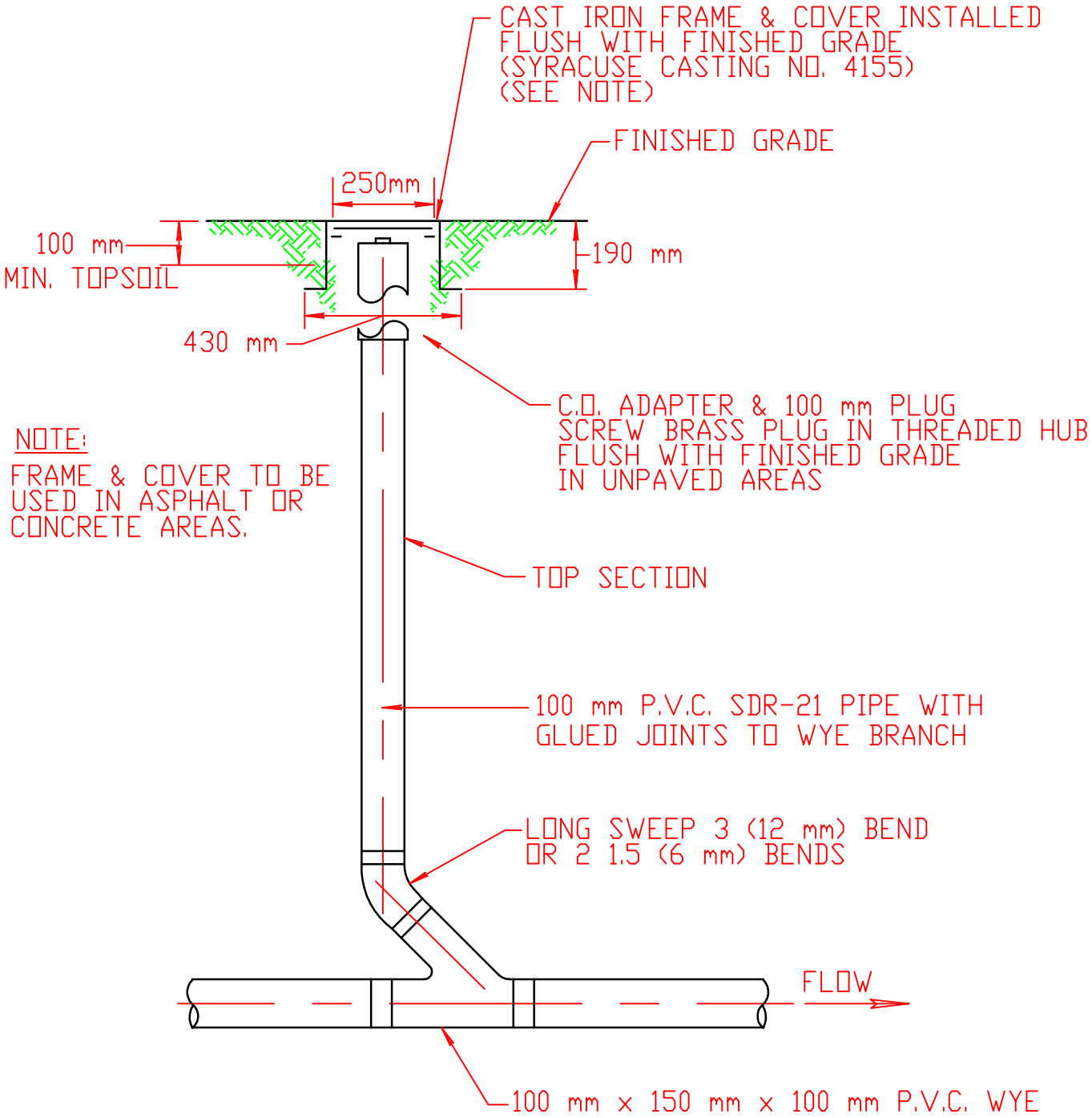

IN-LINE CLEANOUT

NOT TO SCALE

4/1/98

REVISED