REVISED 4/1/98

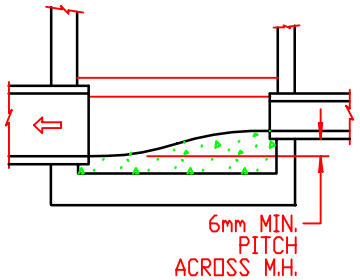

STANDARD INVERT

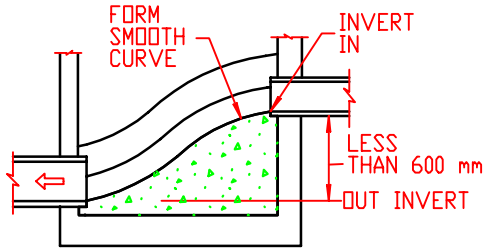

SMOOTH DROP INVERT FILLET

SECTION A-A

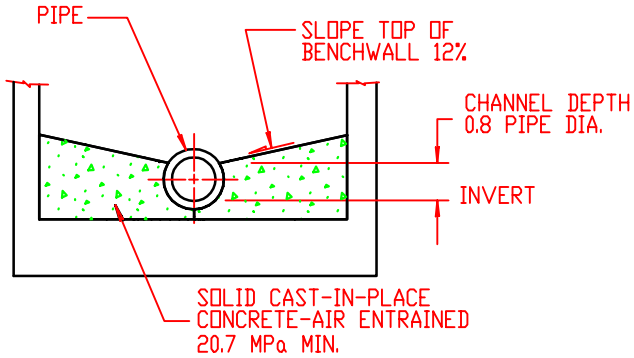

SECTION B-B

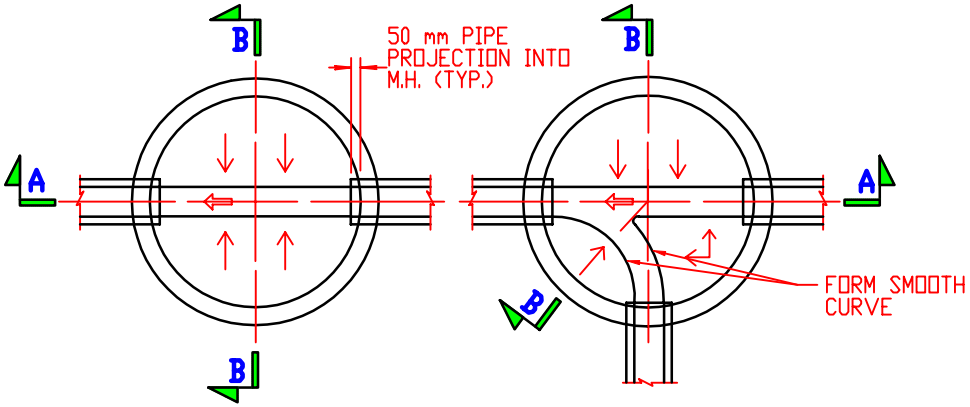

ONE-WAY INVERT

MULTIPLE INVERT

PLAN

PRECAST CONCRETE MANHOLE DETAIL

NOT TO SCALE