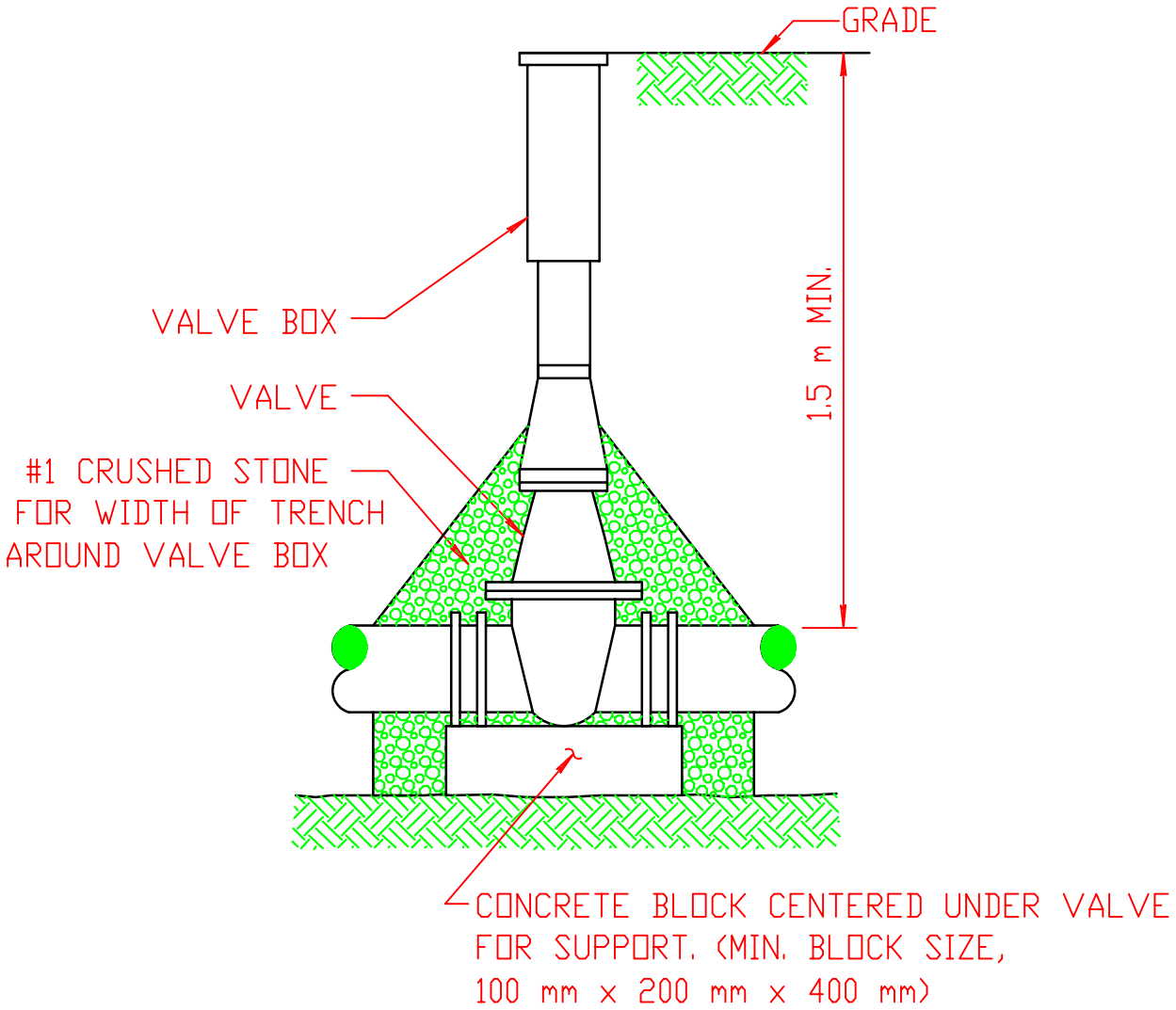

NOTE:

VALVE BOX SHALL BE CENTERED ON VALVE AND SET ON COMPACTED BACKFILL. IN NO CASE SHALL THE VALVE BOX BE SUPPORTED BY THE VALVE BODY.

MAINLINE VALVE

NOT TO SCALE

4/1/98

REVISED