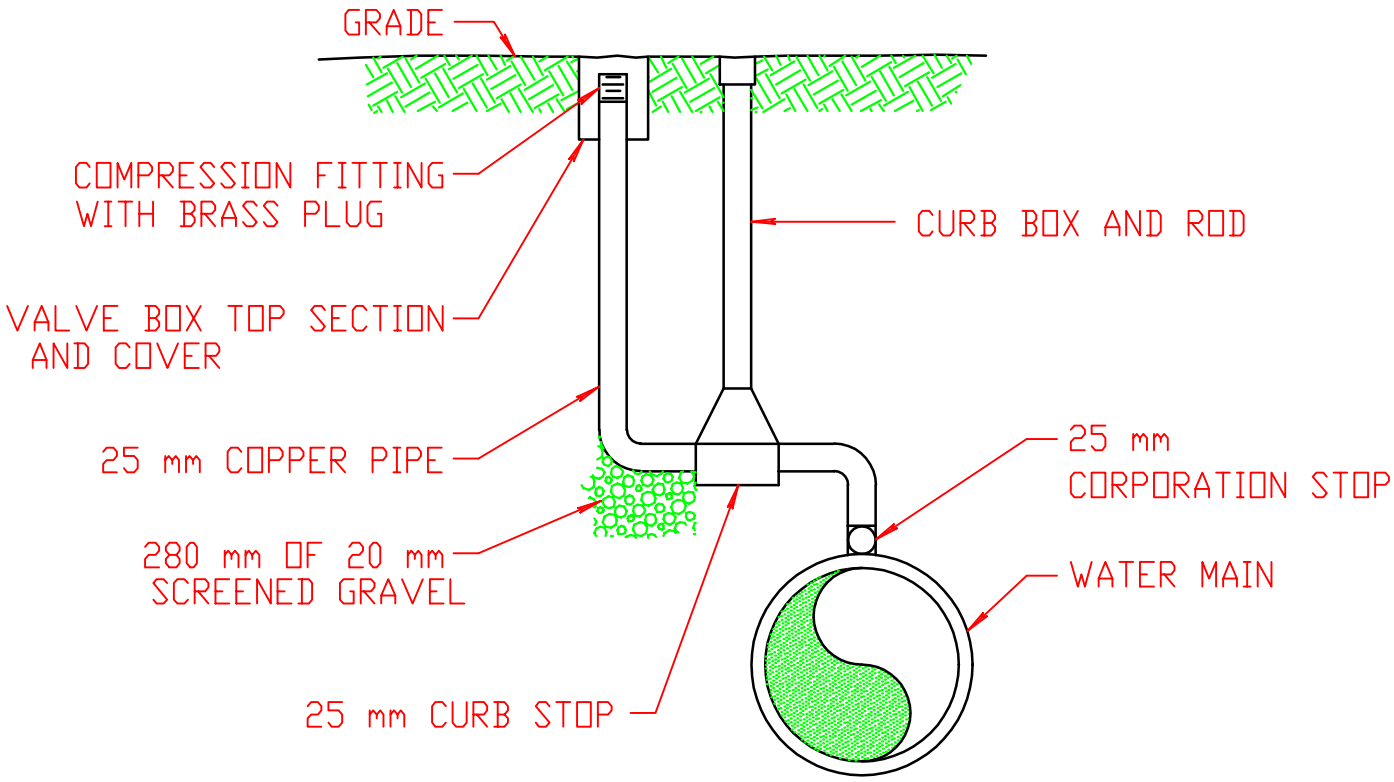

25 mm PERMANENT MANUAL AIR RELEASE

NOT TO SCALE

4/1/98

REVISED