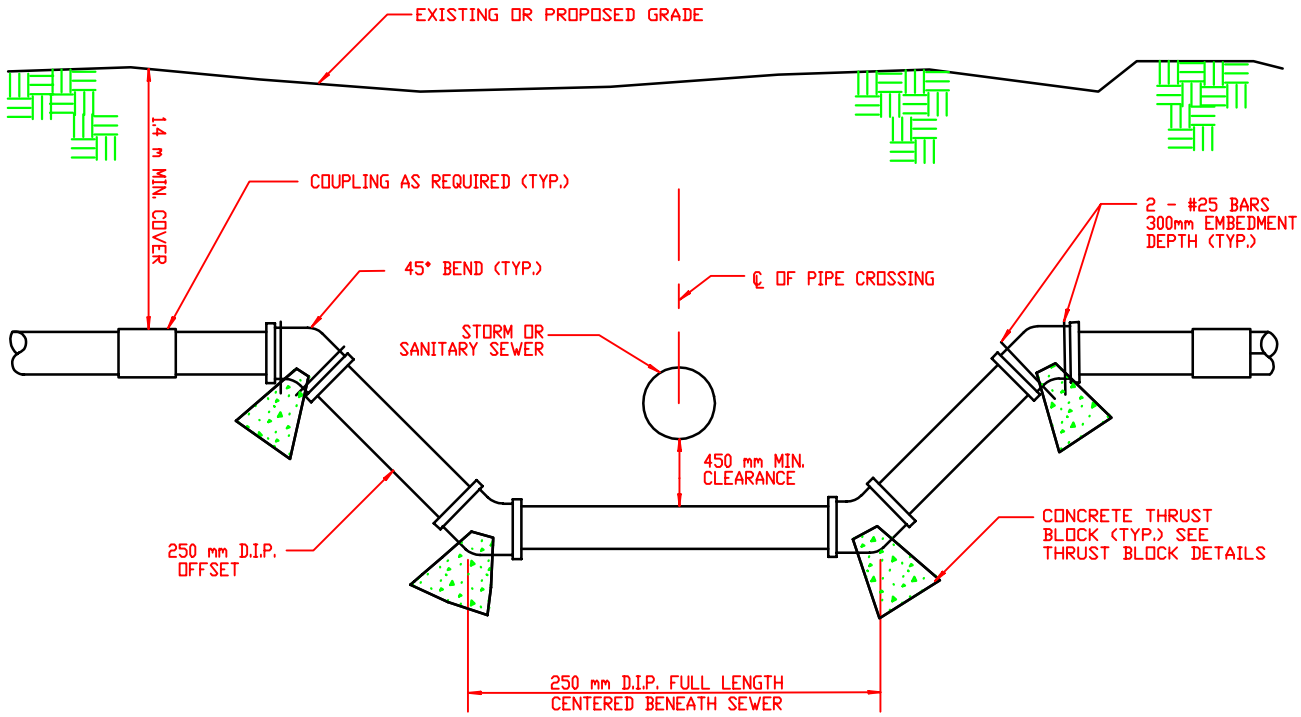

WATERMAIN - SEWER CROSSING DETAIL

ITEM 660.99 M

NOT TO SCALE

8/25/00

REVISED