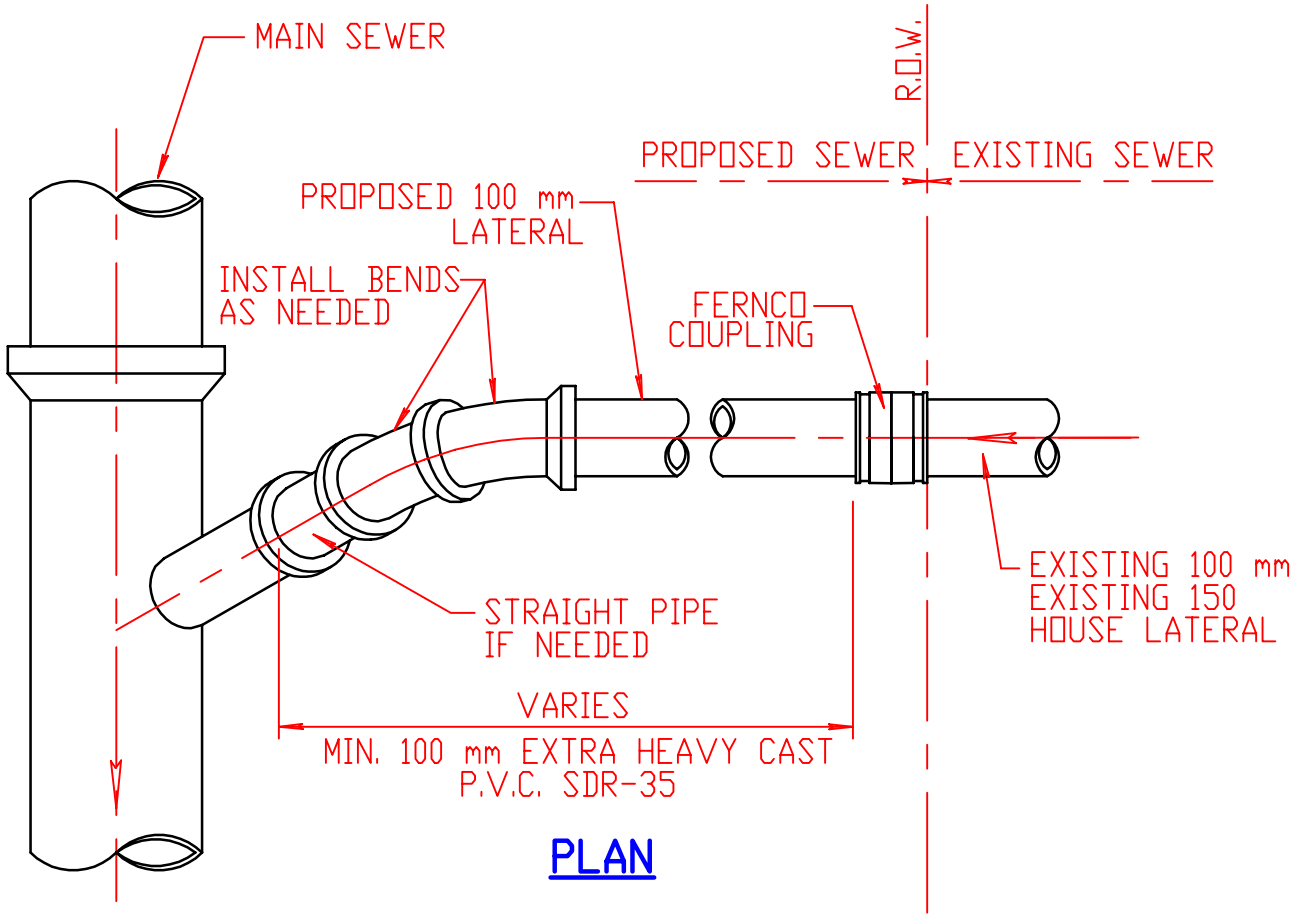

PLAN

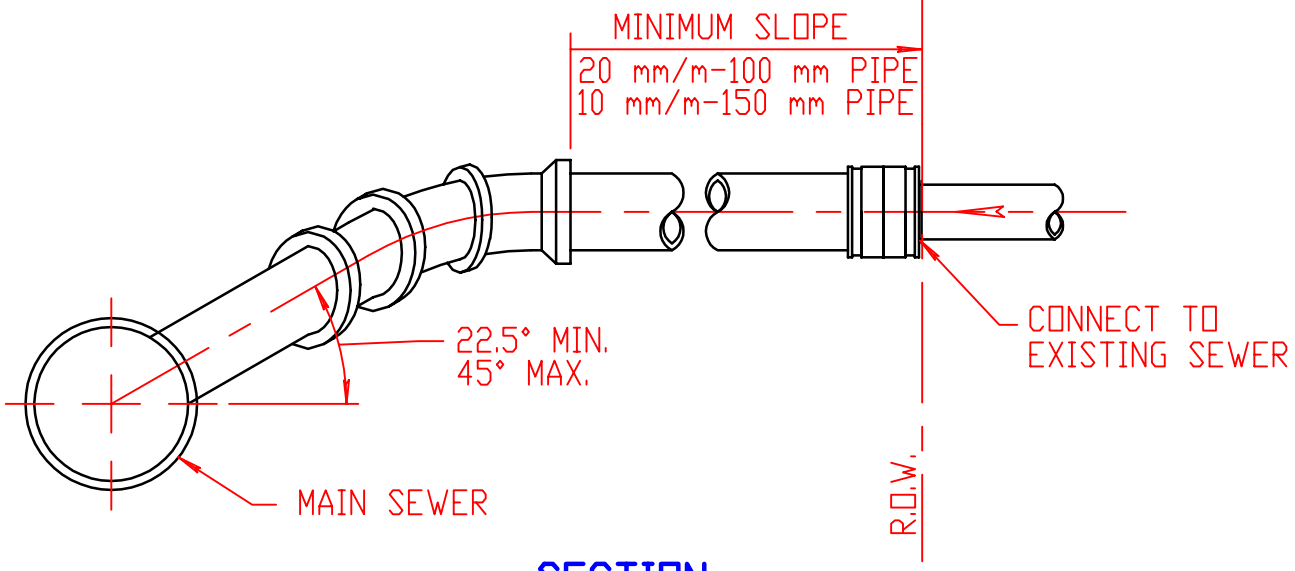

SECTION

WYE BRANCH CONNECTION

NOT TO SCALE

4/1/98

REVISED