REVISED

4/1/98

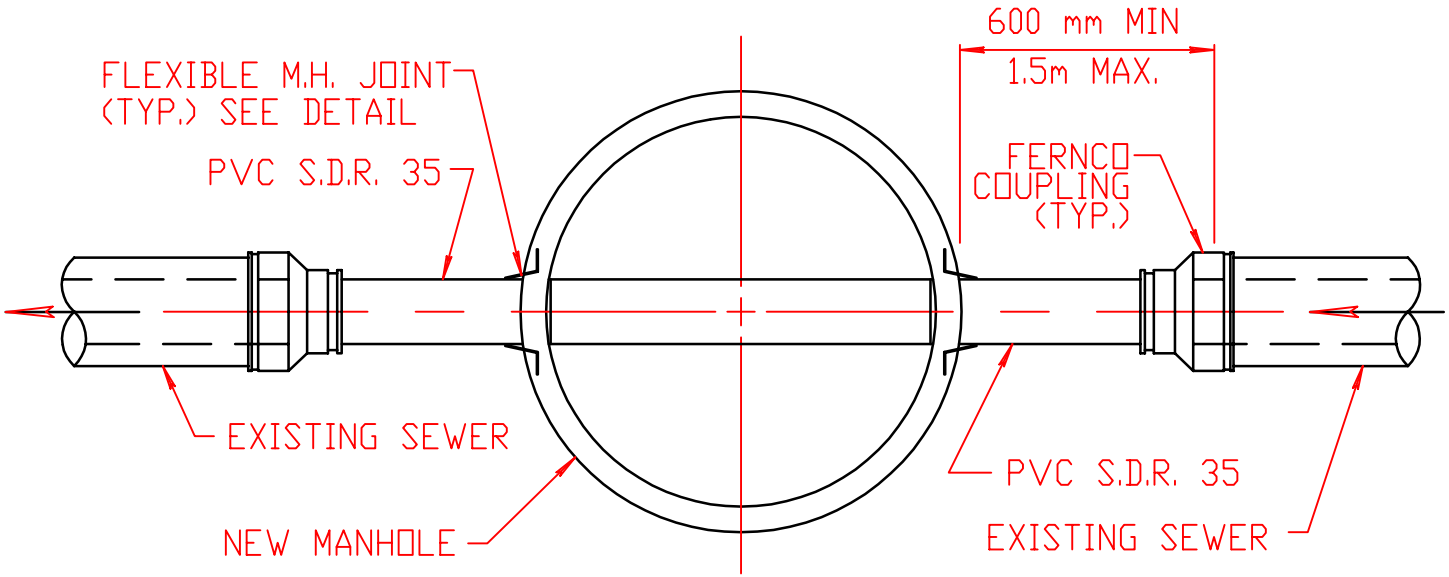

CONNECTION OF EXISTING SEWERS TO NEW MANHOLES

NOT TO SCALE