REVISED 7/14/01

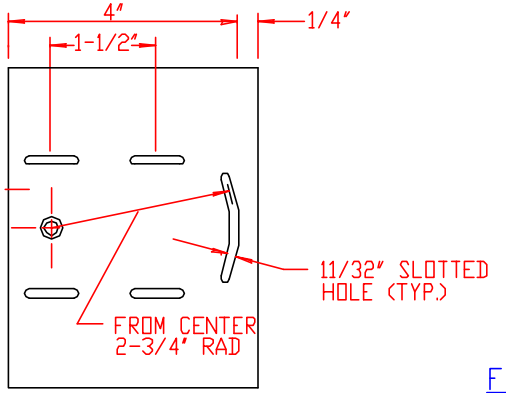

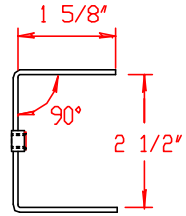

SECTION OF FINISHED BRACKET
NOT TO SCALE

NOTES:

1. BRACKET TO BE BANDED TO THE MAST ARM WITH STAINLESS STEEL BENDING MATERIAL. (3/4" WIDE x 0.015" THICK)
2. BOTH BRACKETS 12 GAUGE GALVANIZED STEEL
3. LONG BRACKET FOR LARGE SIGN (USE 4 BANDS PER BRACKET)
4. SHORT BRACKET FOR STREET NAME SIGNS (USE 2 BANDS PER BRACKET)

SHORT BRACKET
NOT TO SCALE

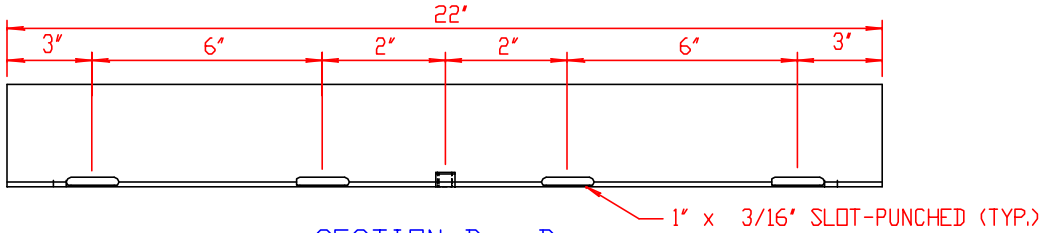

SECTION D - D
NOT TO SCALE

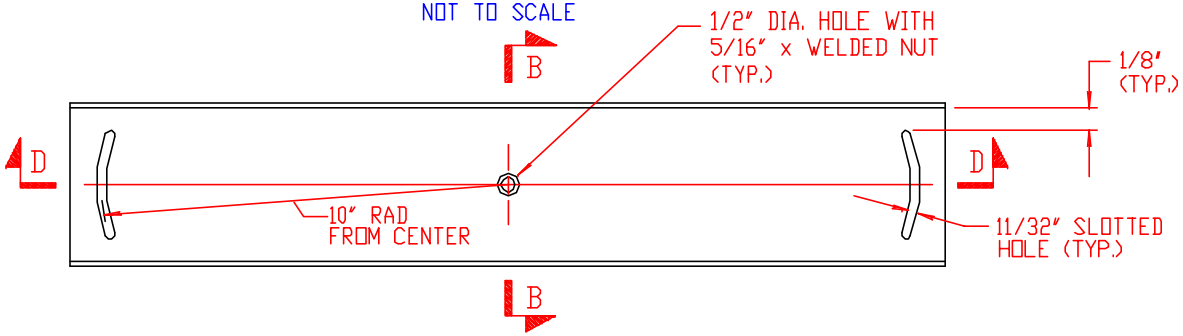

LONG BRACKET
NOT TO SCALE

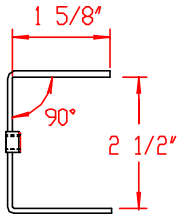

SECTION B - B
NOT TO SCALE

MAST ARM SIGN BRACKET DETAILS
NOT TO SCALE