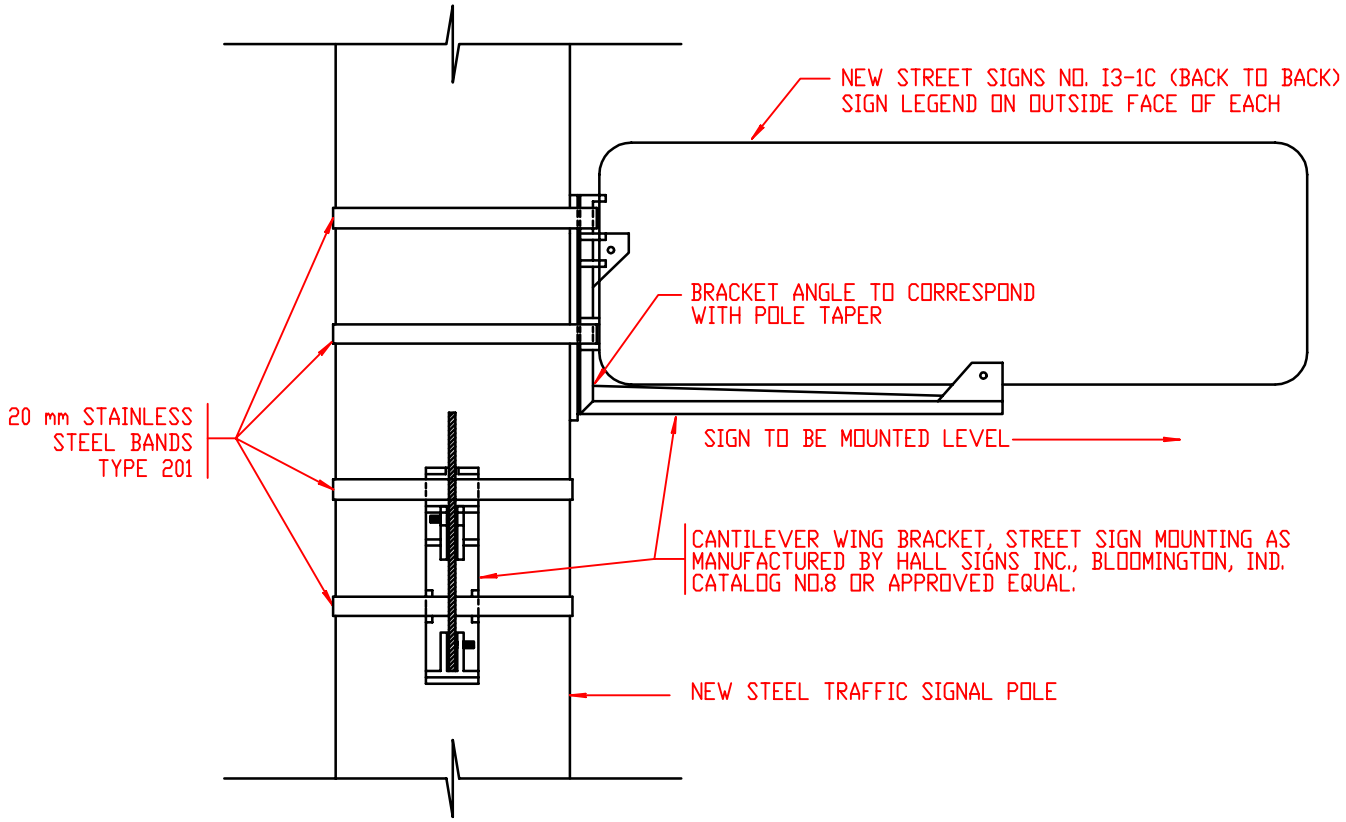

TYPICAL POLE MOUNT STREET SIGN INSTALLATION

NOT TO SCALE

4/1/98

REVISED