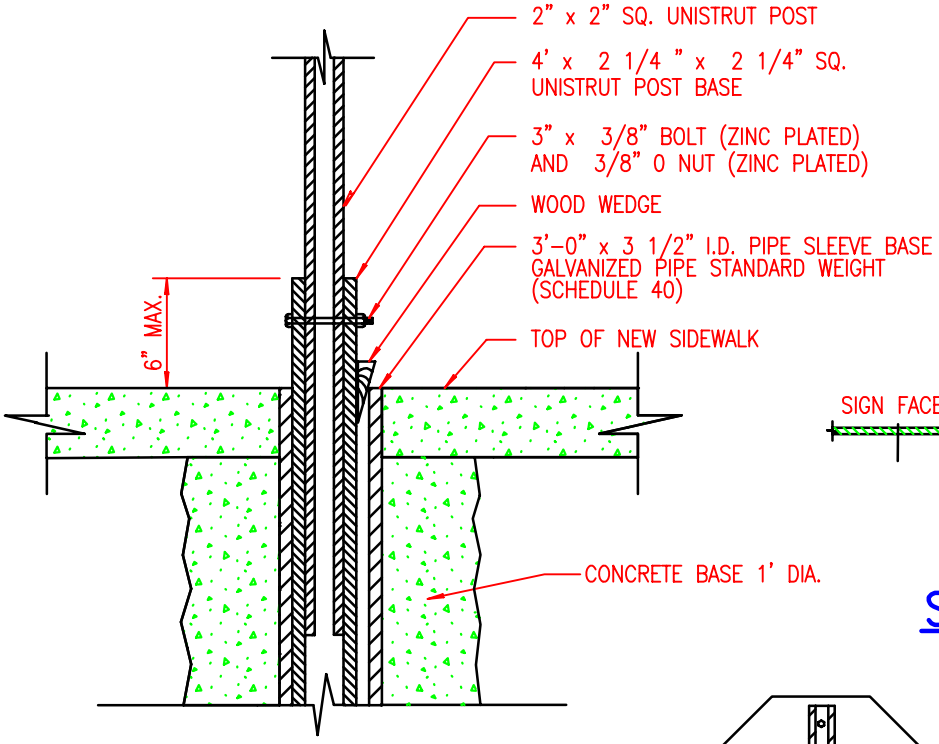

SECTION B – B

NOT TO SCALE

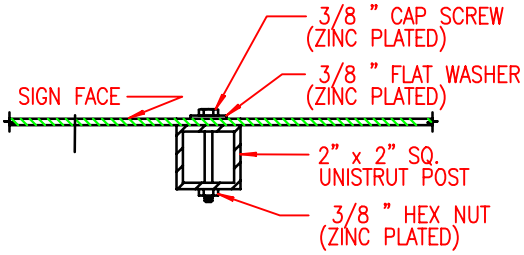

SECTION A – A

NOT TO SCALE

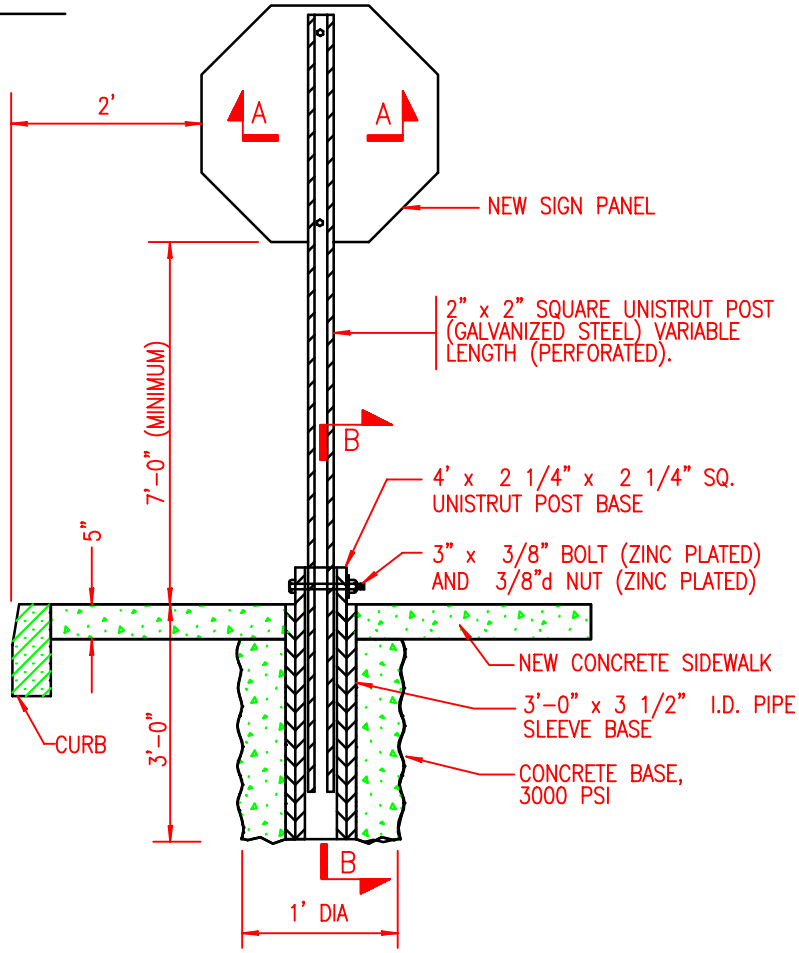

TYPICAL POST MOUNT SIGN INSTALLATION IN CONCRETE

NOT TO SCALE

01/11/00

REVISED