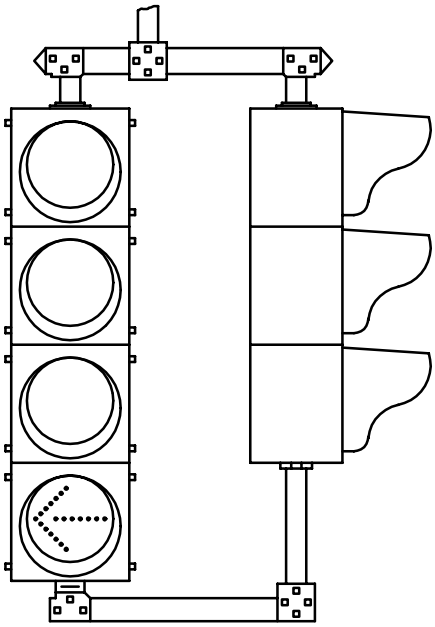

ELEVATION

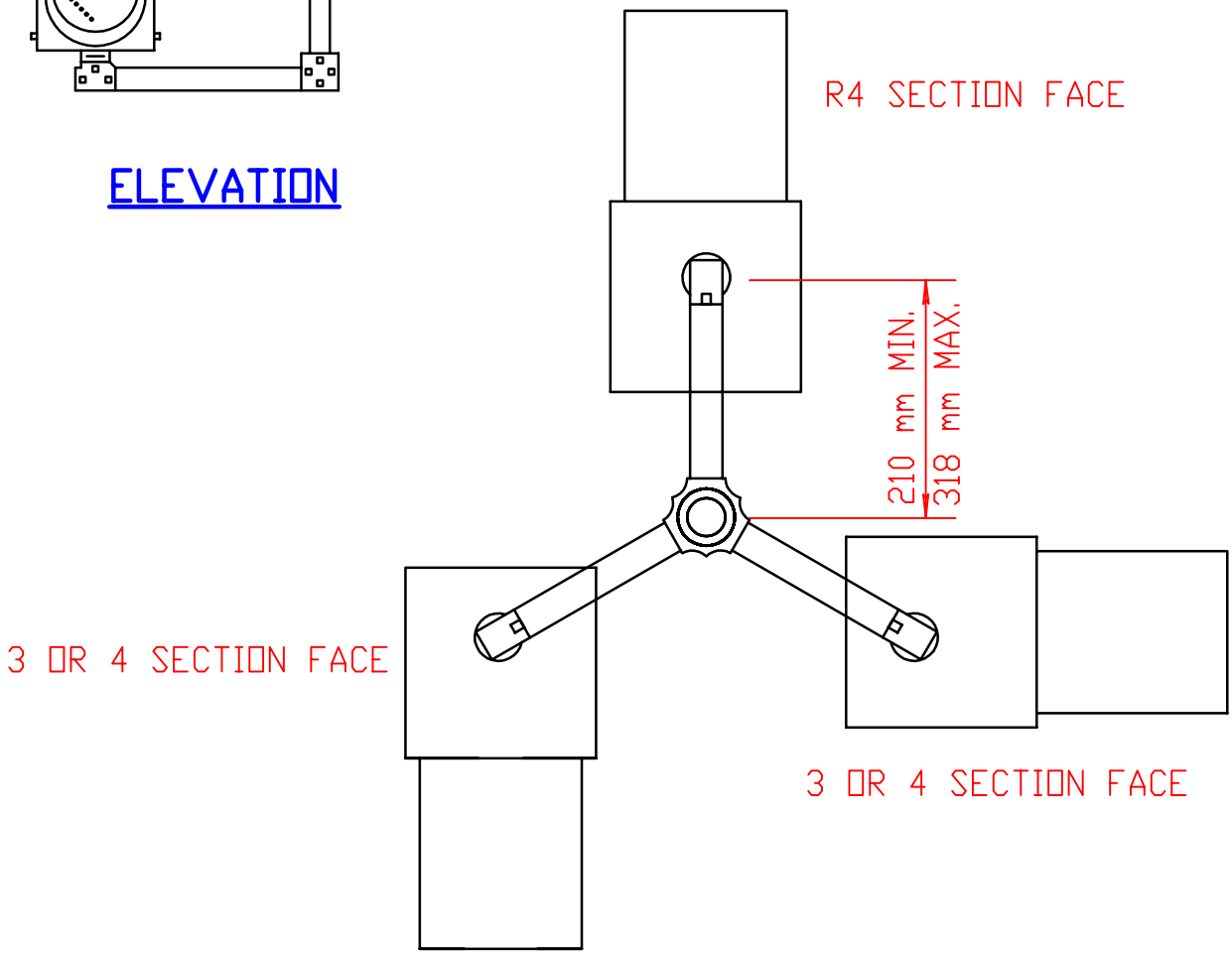

3-WAY BRACKET WITH 3 OR 4 SECTION SIGNAL HEAD

NOT TO SCALE

4/1/98

REVISED