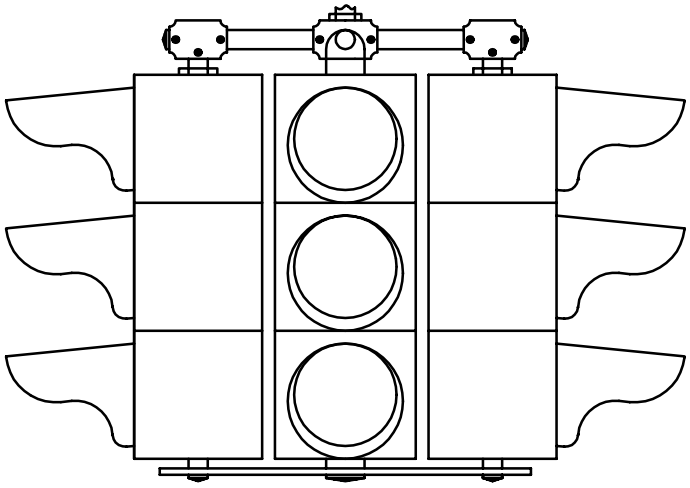

ELEVATION

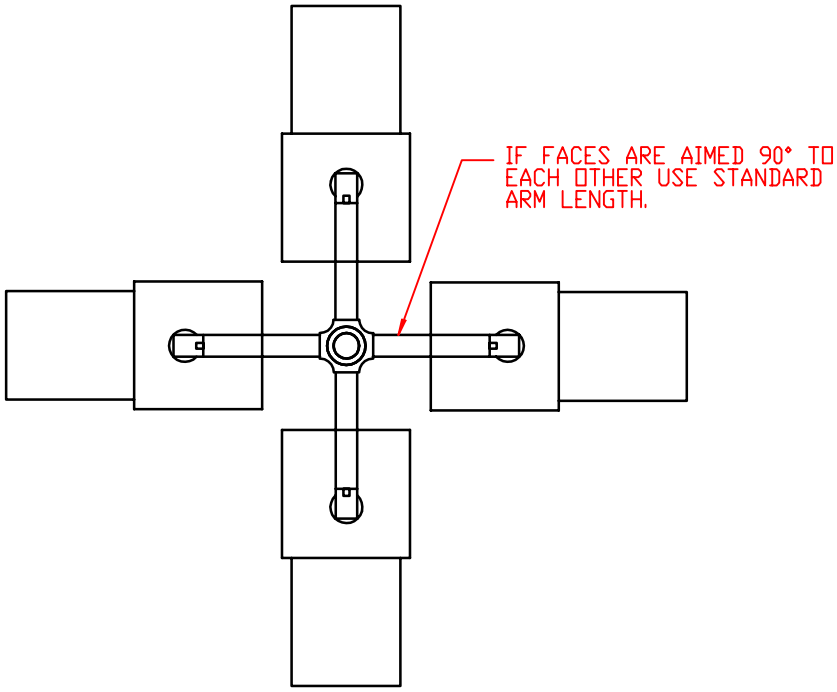

PLAN

4-WAY 3 SECTION SIGNAL HEAD

NOT TO SCALE

4/1/98

REVISED