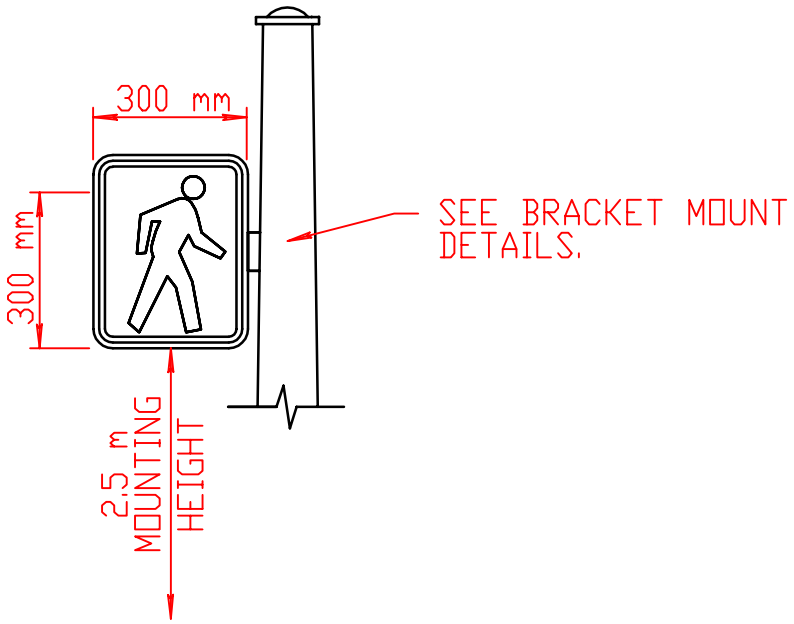

NOTES:

1. POLE RIGHT MOUNT AT 90° SHOWN
2. "MAN" SYMBOL SHOWN, "HAND" SYMBOL ON THE SAME SECTION.

CLAMSHELL PEDESTRIAN SIGNAL

NOT TO SCALE

7/14/00

REVISED