REVISED 4/1/98

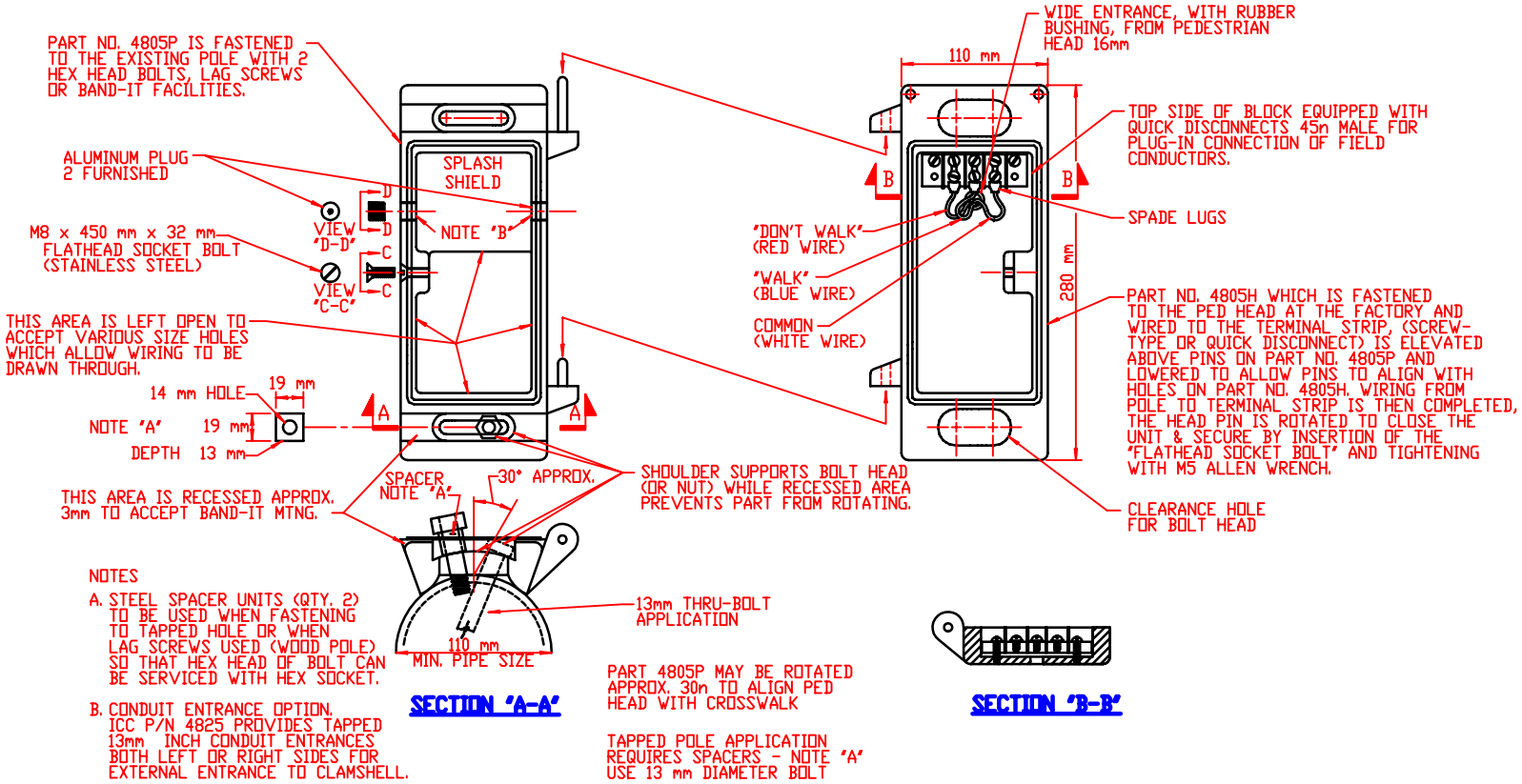

NOTES

A. STEEL SPACER UNITS (QTY. 2) TO BE USED WHEN FASTENING TO TAPPED HOLE OR WHEN LAG SCREWS USED (WOOD POLE) SO THAT HEX HEAD OF BOLT CAN BE SERVICED WITH HEX SOCKET.

B. CONDUIT ENTRANCE OPTION. ICC P/N 4825 PROVIDES TAPPED 13mm INCH CONDUIT ENTRANCES BOTH LEFT OR RIGHT SIDES FOR EXTERNAL ENTRANCE TO CLAMSHELL.

CLAMSHELL PEDESTRIAN SIGNAL BRACKET MOUNT DETAILS

NOT TO SCALE