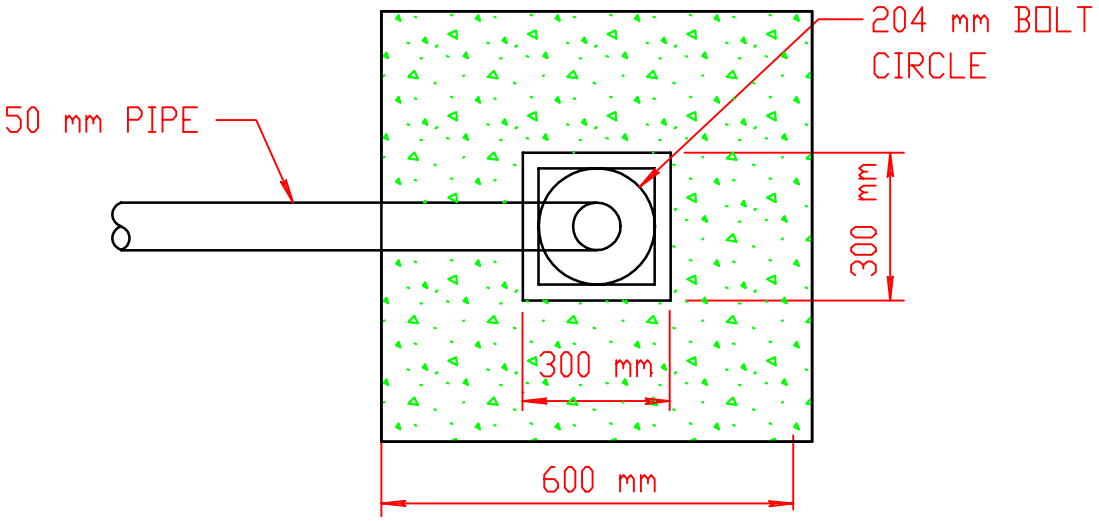

CONCRETE BASE
FOR PEDESTRIAN SIGNAL POLE

NOT TO SCALE

4/1/98

REVISED