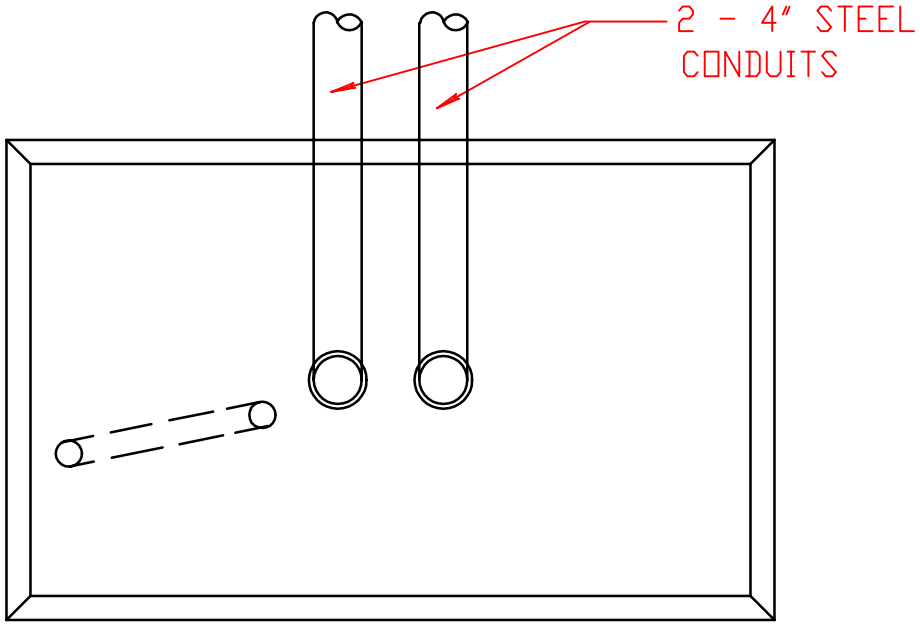

FRONT OR REAR CONDUIT EXIT

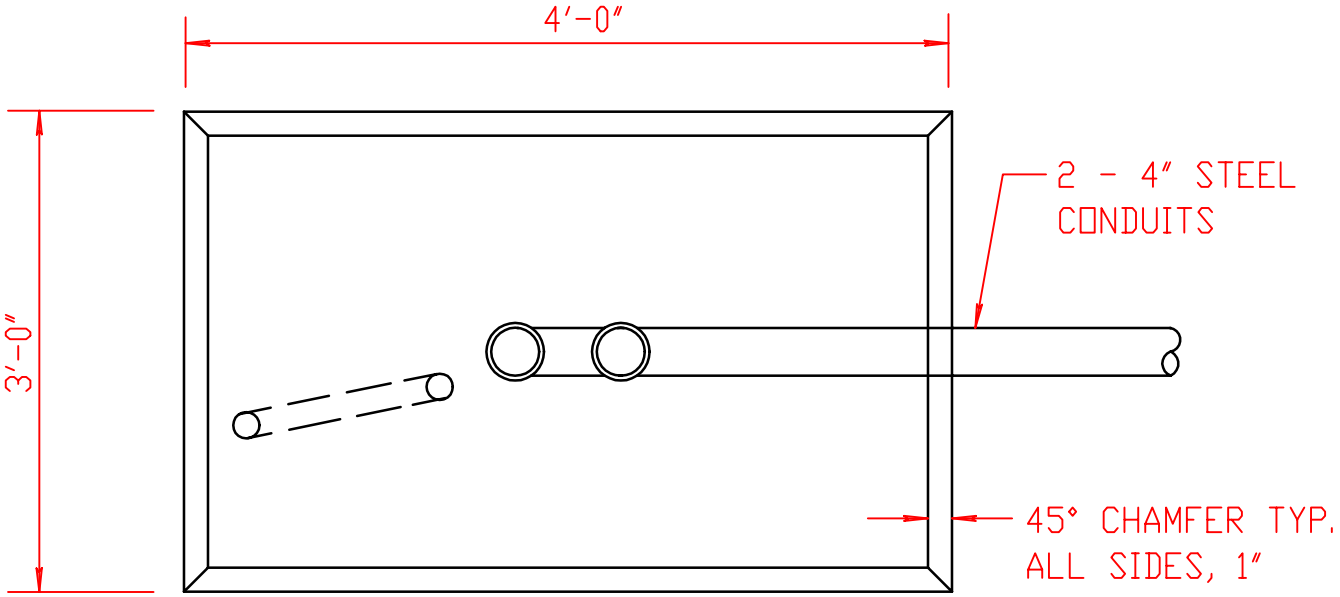

SIDE CONDUIT EXIT

CONCRETE CONTROLLER BASE DETAILS

NOT TO SCALE

4/1/98

REVISED