REVISED 4/1/98

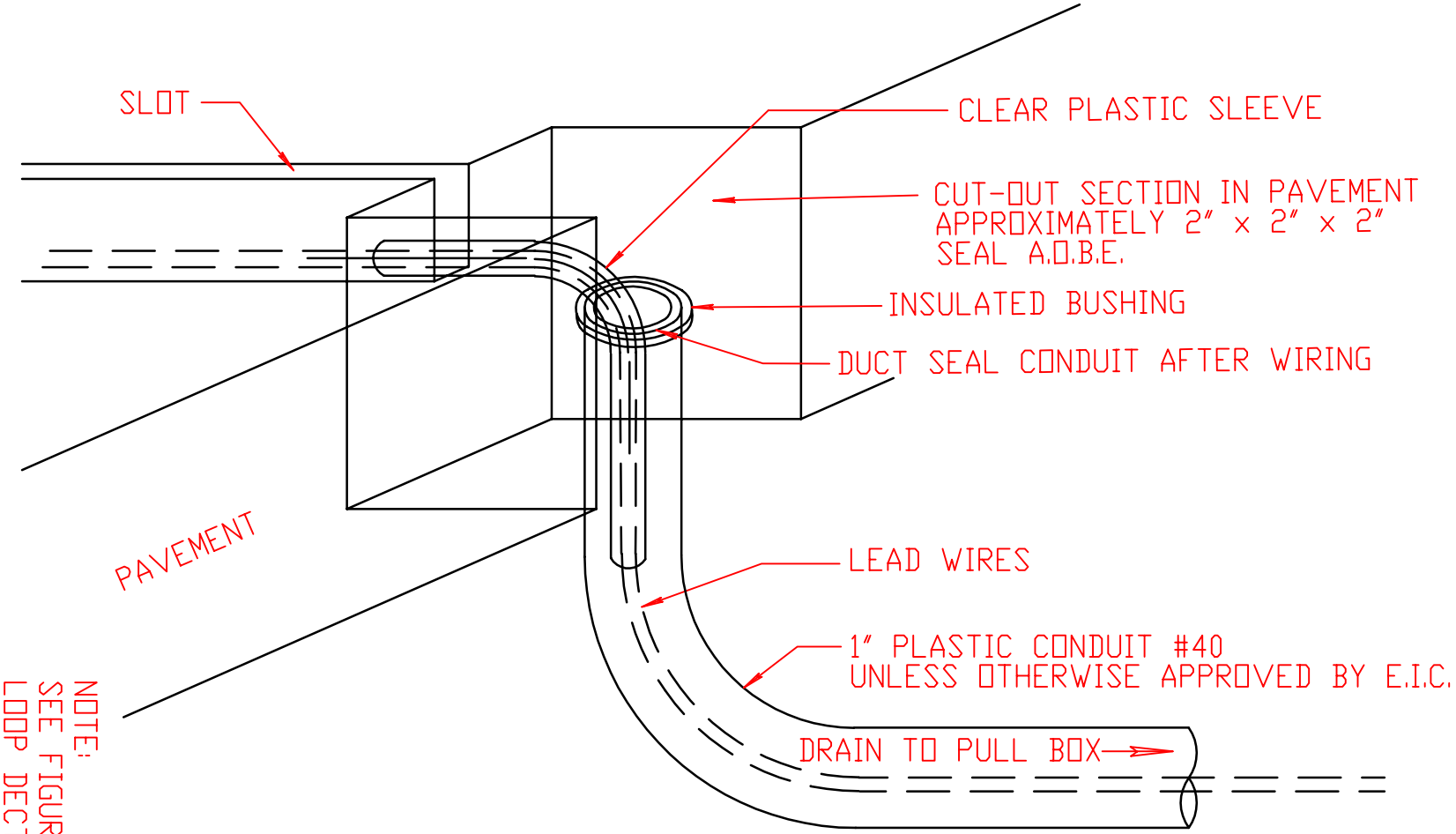

NOTE:
SEE FIGURE MMTD-3X FOR
LOOP DECTOR NOTES.

LOOP DETECTOR IN CURB SECTION DETAIL

NOT TO SCALE