TWO SCREWS & ONE COVER PLATE WITH EACH POLE

NOT TO SCALE

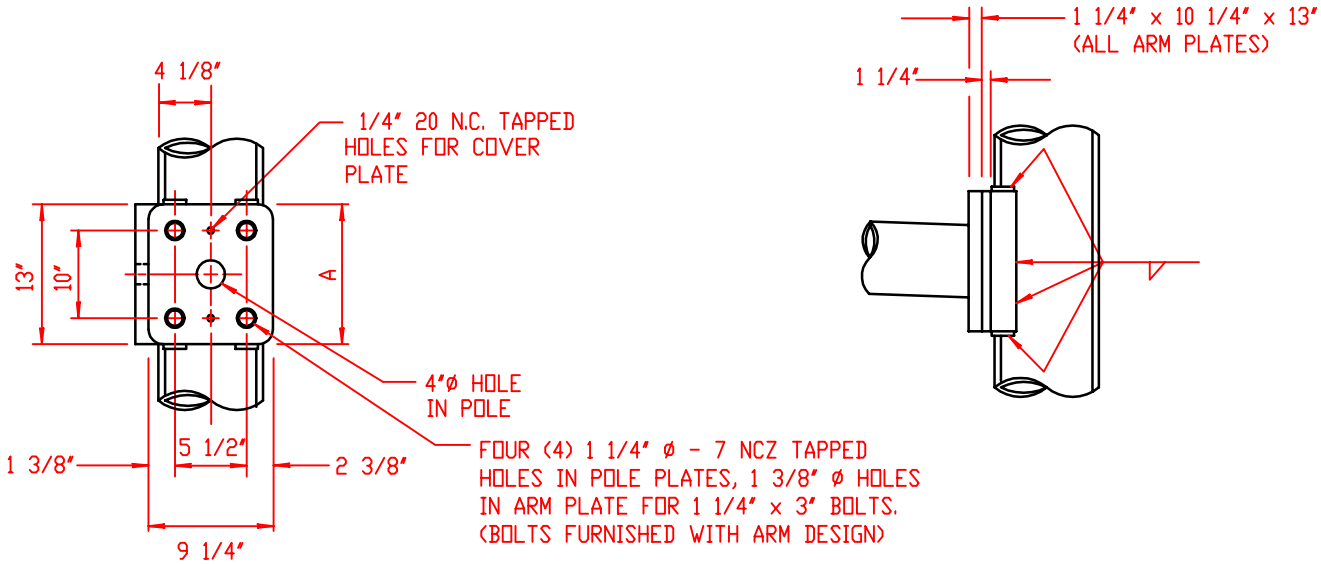

MAST ARM ATTACHMENT DETAILS

NOT TO SCALE

4/1/98

REVISED