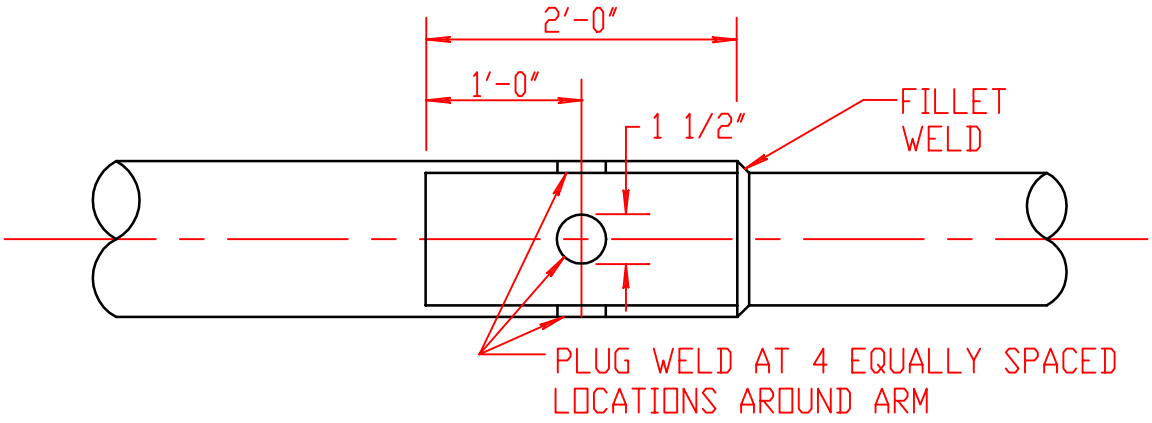

MAST ARM EXTENSION

NOT TO SCALE

4/1/98

REVISED