REVISED 4/1/98

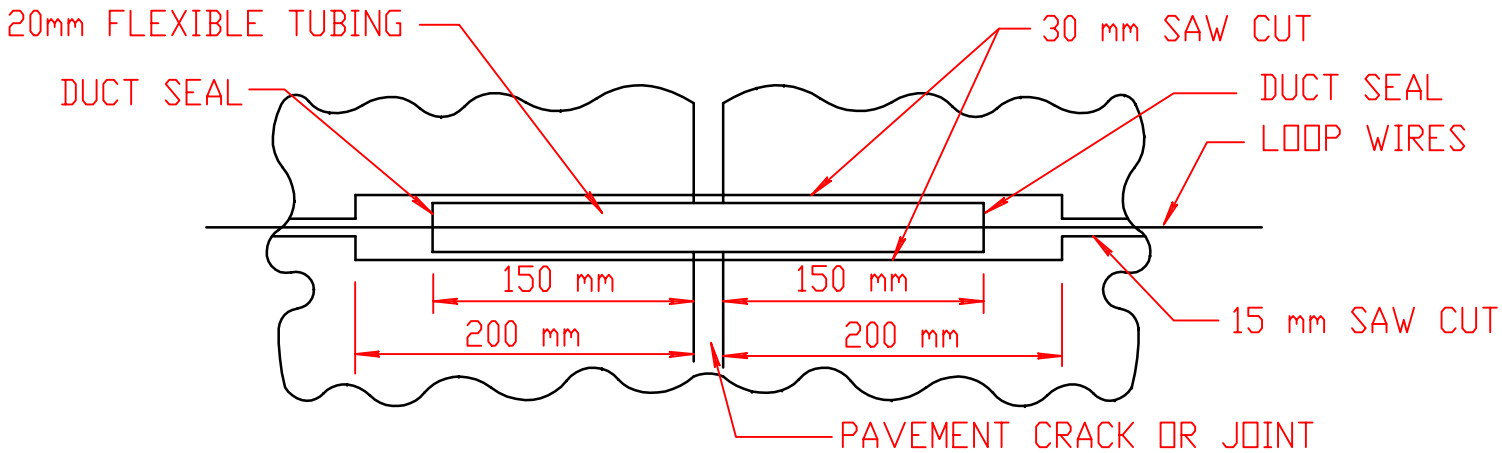

TOP VIEW

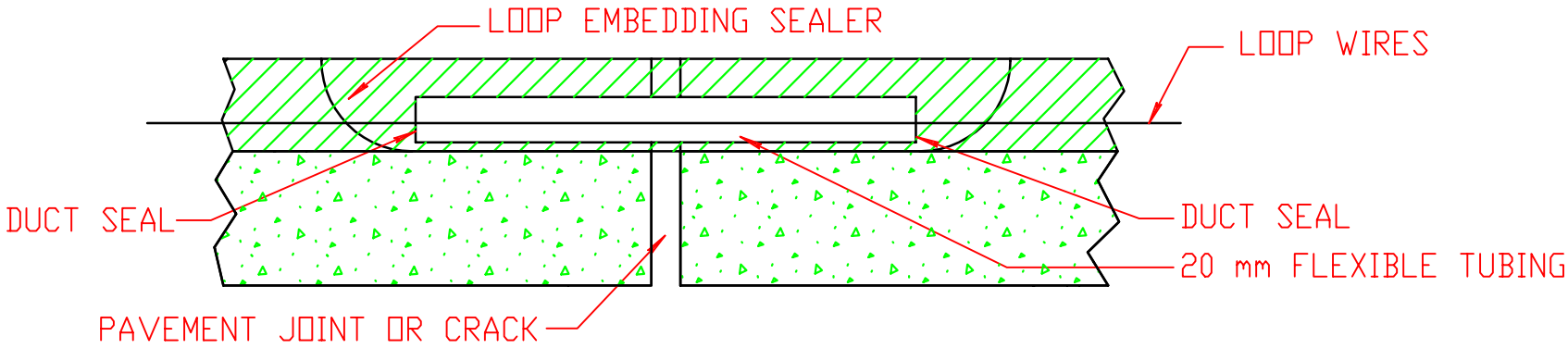

SIDE VIEW

TYPICAL METHOD OF CROSSING PAVEMENT JOINTS OR CRACKS

NOT TO SCALE