REVISED 4/1/98

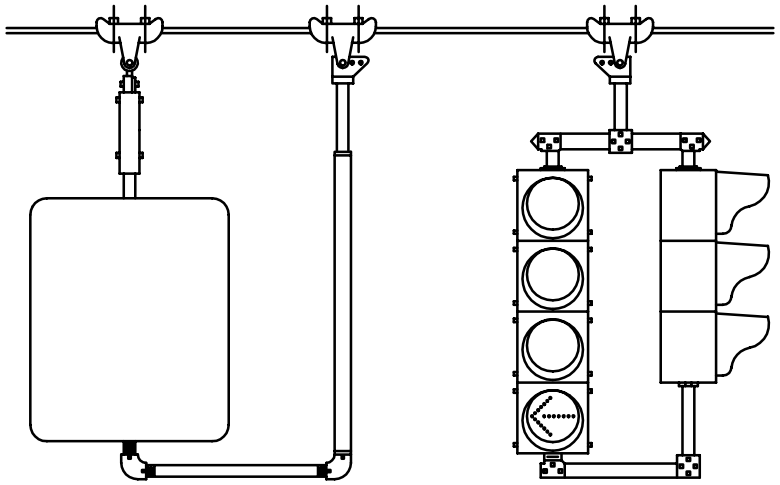

THE MOUNTING ARRANGEMENT SHOWN ARE TYPICAL OF THOSE THAT CAN BE FABRICATED USING THE BASIC SINGLE SPAN WIRE MOUNTING BRACKET AND STANDARD TRAFFIC SIGNAL HARDWARE.

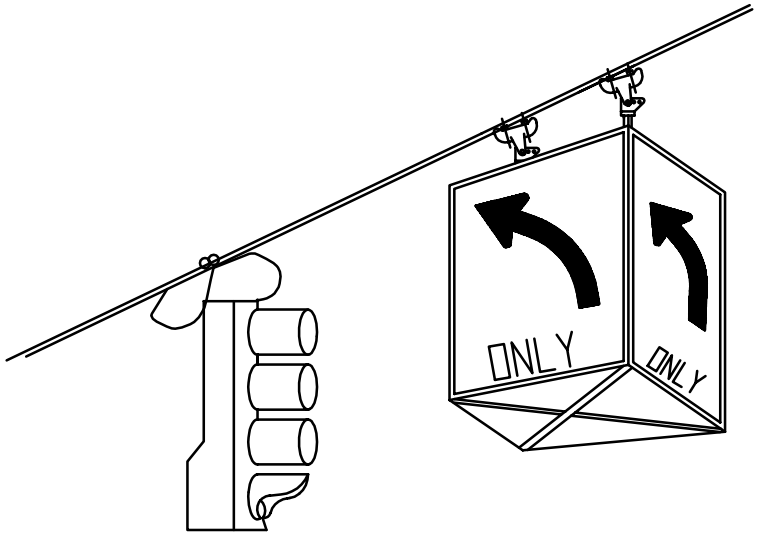

NOTES:

1. ALL ELBOWS, TEES, PIPE CROSSES, ETC. ARE TRAFFIC SIGNAL FITTINGS EQUIPPED WITH SET SCREWS.
2. ALL THREADS ARE NATIONAL PIPE STRAIGHT THREAD.
3. ALL FITTINGS, PIPE, NIPPLES, AND FASTENERS SHALL BE NON-CORROSIVE.

TYPICAL MOUNTING ARRANGEMENTS

NOT TO SCALE