REVISED 7/14/00

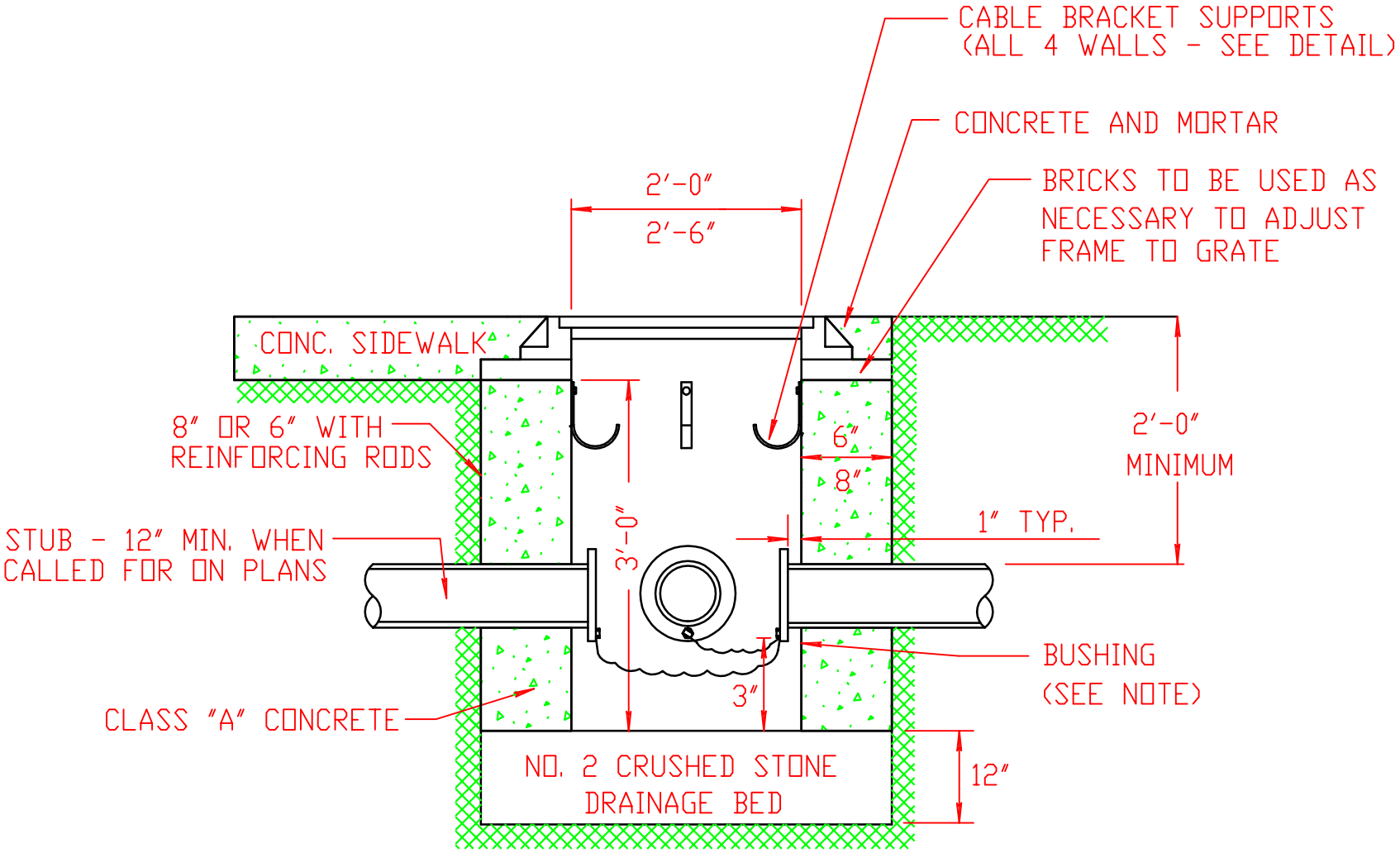

SECTION IN EARTH

PULL BOX DETAILS

NOT TO SCALE

NOTE
THE INSULATED BUSHING SHALL BE METAL AND HAVE A GROUND LUG FOR #6 COPPER WIRE. ALL CONDUITS SHALL BE WIRED/GROUNDED TOGETHER WITH THE BARE #6 COPPER WIRE.

NOTE:
FOR ADDITIONAL INFORMATION, REFER TO THE GENERAL NOTES ON FIGURE 134.