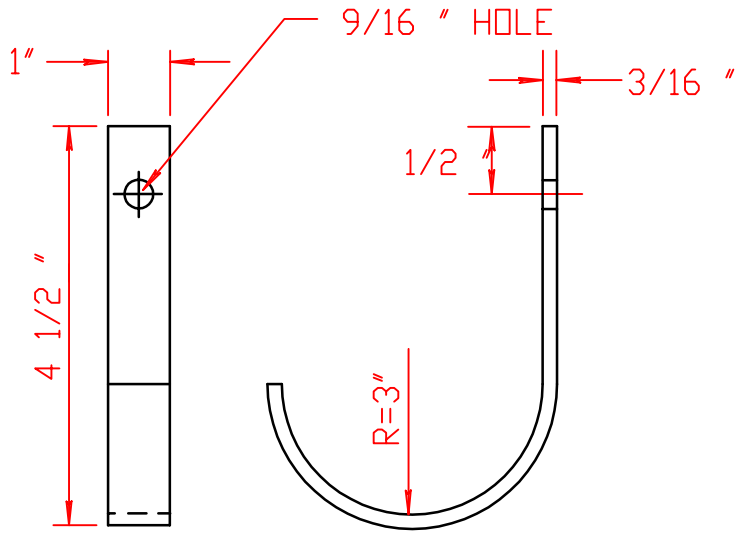

STEEL CABLE BRACKET SUPPORT
(HOT DIPPED GALVANIZED)

PULL BOX DETAILS

NOT TO SCALE

4/1/98

REVISED