REVISED 4/1/98

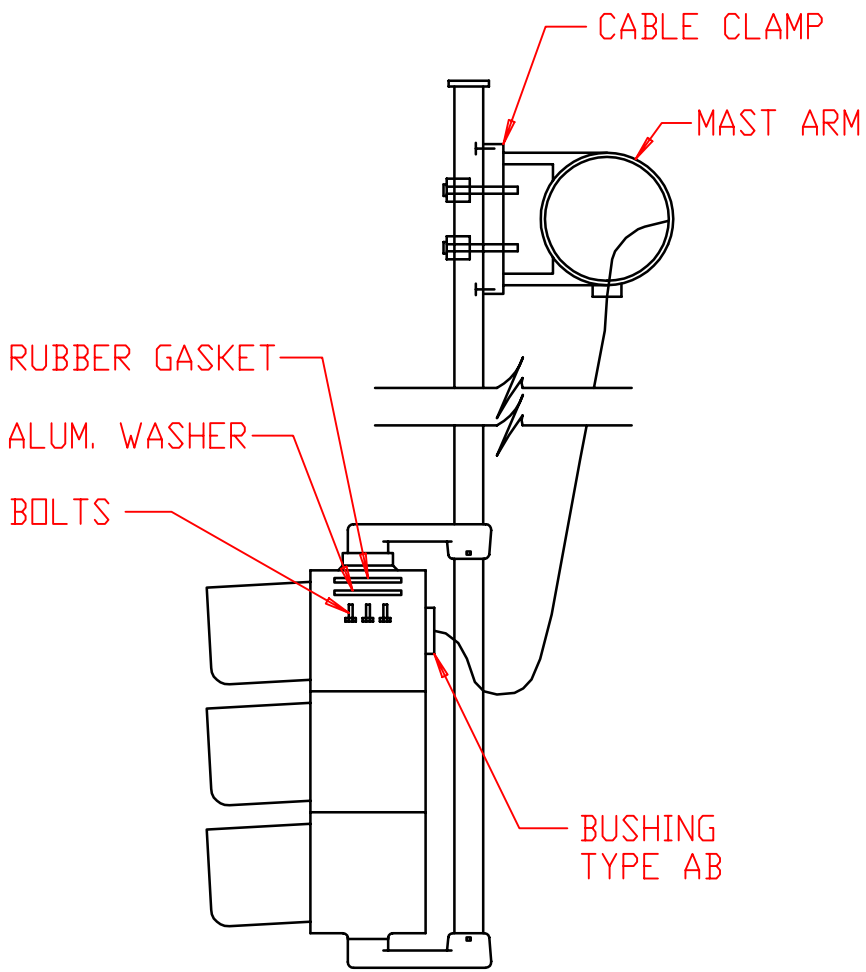

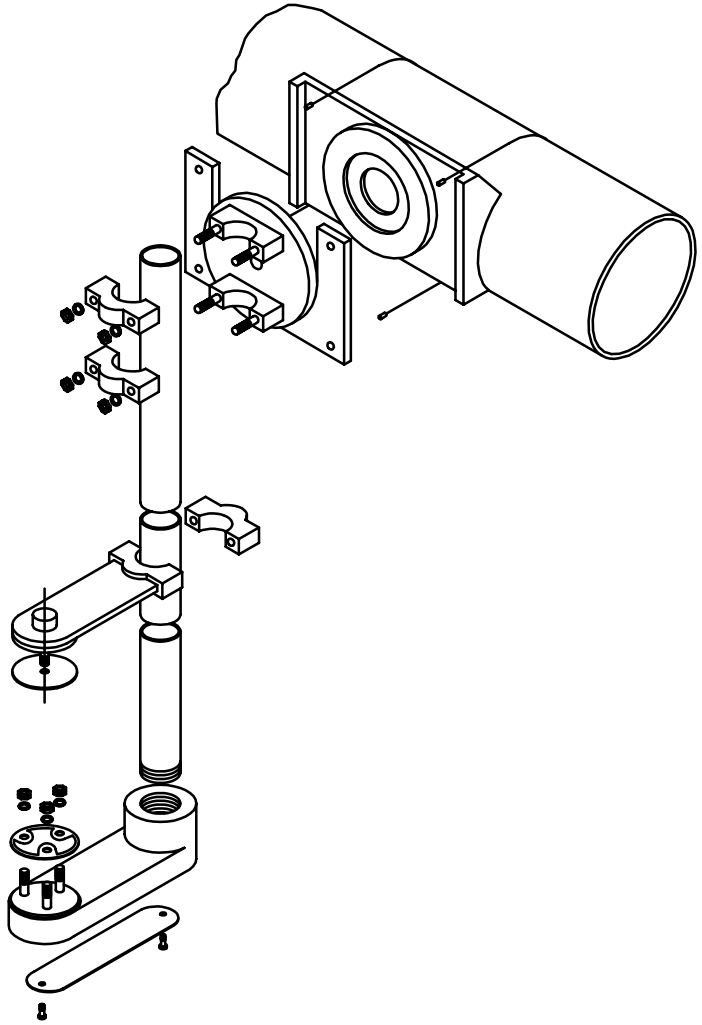

RIGID SIGNAL HEAD MOUNTING

NOT TO SCALE