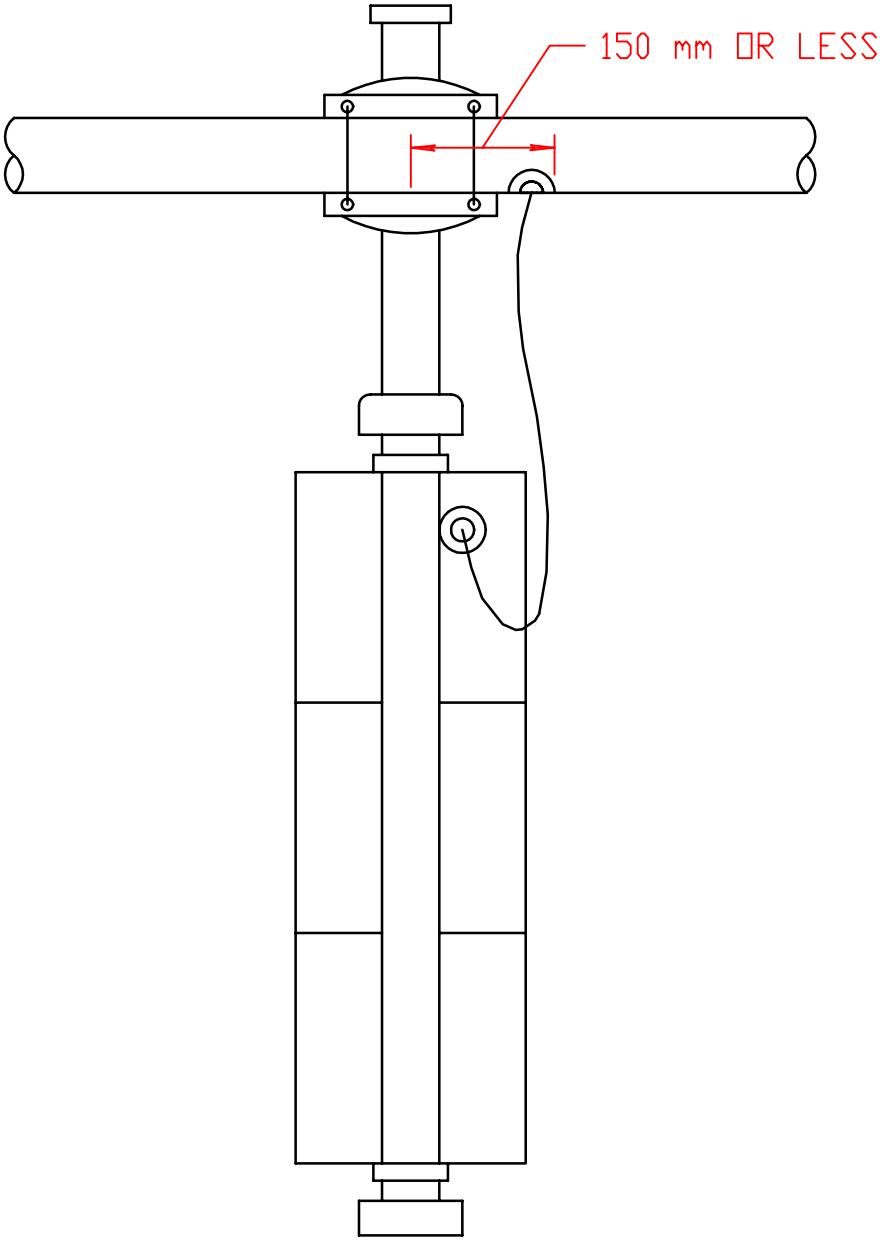

REAR VIEW OF RIGID SIGNAL HEAD MOUNTING

NOT TO SCALE

4/1/98

REVISED