CONTRACT DATA SHEET

Monroe County Division of Purchasing
200 County Office Building, Rochester NY 14614

TITLE:	2015 HIGHWAY MATERIALS – GROUP I
CONTRACT #:	0103-15
CONTRACT DATES:	03/01/15 – 02/29/16
BUYER:	SHARON A. BERNDT
PHONE:	585/753-1110
FAX:	585/753-1104
VENDOR(S):	VARIOUS – PER ATTACHED LIST

2015 HIGHWAY MATERIALS – GROUP I

Contract#	Vendor #	Vendor Name	Awarded
4700007195	115453	All County Construction	Pavers, Rollers, Paver Operator, Screedman, Roller Operator, Heavy Laborer
4700007196	106960	Birchcrest Tree & Landscape Inc.	Tree Service
4700007197	103328	Cardinal Landscape Inc.	Hydroseeding; Tree & Shrub Various Options
4700007198	115536	Champion Asphalt Maintenance	Crack Seal; Tack Coat (CSS-1h, HFMS-2) – Trailer unit: Hand Applications ONLY
4700007199	116803	De Cann Distributors.	Tack Coat (HFMS-2)
4700007200	117625	Donegal Construction Corp.	Cold Milling of Asphalt Pavement & Mixed Composition & Supplements – Asphalt Mill – Options C & E – Mixed Composition Milling – Options F, G, H, I & J; Supplemental Milling Items
4700007214	108929	Espana Enterprises LLC.	Concrete Sidewalks Various Options; Stone Curb Various Options
4700007201	105307	Hanson Aggregates New York LLC	Pavers, Rollers (10 Ton), Paver Operator, Screedman, Roller Operator, Heavy Laborer
4700007202	107600	Highway Rehab. Corp.	Hot In Place Asphalt Recycling
4700007203	107663	Hynes Concrete Contractor Inc.	Concrete Gutter Various Operations; Concrete Curb Various Options
4700007204	107569	Innovative Municipal Products (US) Inc.	Liquid Calcium Chloride
4700007205	107998	Iroquois Rock Products	Pavers, Rollers, Paver Operator, Screedman, Roller Operator, Heavy Laborer
4700007206	102473	Keeler Construction Co. Inc.	Pavers, Rollers, Paver Operator, Screedman, Roller Operator, Heavy Laborer
4700007216	107265	Midland Asphalt Materials Inc.	Pretreatment of Surface Treatment; Surface Treat A (CS-2 & CRS-2p); Surface Treat B – CRS-2 & CRS-2p); Hand Spray Application; Fibermat A (SAM); Fibermat B (SAMI); Nova Chip; Motopave (CSS-1 & CSS-1h; Tack Coat (CSS-1h & Rapid Breaking Tack Coat); Type II Recycling; Pavement Reclamation Full Depth
4700007207	109911	Millennium Roads, LLC	Stablized Shoulder Material
4700007205	117637	Minority Material Haulers	Pavers, Rollers, Paver Operator, Screedman, Roller Operator, Heavy Laborer
4700007215	106859	R.M. Landscape, Inc.	Slice Seeding; Soil Cutting and Removal
4700007209	103382	Rochester Asphalt Materials	Pavers, Rollers, Paver Operator, Screedman, Roller Operator, Heavy Laborer
4700007210	108928	Spezio Property Services, Inc.	Motorized Sweeping
4700007211	100224	Suit-Kote Corporation	Surface Treat A (SAM) (RS-2, HFRS-2, RS-2p, HFRS-2p); Surface Treat B (RS-2, HFRS-2, RS-2p, HFRS-2p); Motopave (HFMS-2, HFMS-2h, HFMS-2gh, CMS-2, CMS-2h); Tack Coat (HFMS-2 & Rapid Breaking Tack Coat) Pavement Recycling Pugmill Mix/Central Plant
4700007212	104483	Sunshine Concrete Co., Inc.	Reconstruct Drop Inlet
4700007213	102760	Villager Construction, Inc.	Cold Milling of Asphalt Pavement and Mixed Composition and Supplements – Asphalt Milling – Options A, B & D - Mixed Composition Milling – Option F; Supplemental Milling Items; Pavers, Rollers, Paver Operator, Screedman, Roller Operator, Heavy Laborer

Monroe County Department Of Transportation

2015 Highway Materials Bid Awards (BASE)

Group I

ITEM PRETREAT AGGREGATE, LIQUID BITUMINOUS SURFACE TREAT, PAVER PLACED SURFACE TREAT, MOTOPAVE AND TACK COAT

Base Price = $630 / US Ton

Option	Material	Unit	Suit-Kote Corp.	Midland Asphalt Materials Inc.	Champion Asphalt Maintenance
PRETREATMENT OF SURFACE TREATMENT	Pretreating Surface Treatment Aggregate DEC 50	GAL.	1.967	1.917	[redacted]
	Pretreating Surface Treatment Aggregate MC 30	GAL.		5.110	
	Pugmill Rental – Full Day (8 hrs.)	Full Day	2,200.00	2,400.00	
	Pugmill Rental – Hourly	Hour	275.00	300.00	
	Mobilization Fee	Fixed Price	$400.00	$400.00	
SURFACE TREAT A	Surface Treating w/ Rapid Setting Asphalt Emulsion **RS-2**	GAL.	2.831		
	Surface Treating w/ High Float Rapid Setting Asphalt Emulsion **HFRS-2**	GAL.	2.831		
	Surface Treating w/ Cationic Rapid Setting Asphalt Emulsion **CRS-2**	GAL.		2.834	
	Surface Treating w/ Polymer Modified Rapid Setting Asphalt Emulsion **RS-2p**	GAL.	3.063		
	Surface Treating w/ Polymer Modified High Float Rapid Setting Asphalt Emulsion **HFRS-2p**	GAL.	3.063		
	Surface Treating w /Polymer Modified Cationic Rapid Setting Asphalt Emulsion **CRS-2p**	GAL.		3.067	
SURFACE TREAT B	Surface Treating w/ Rapid Setting Asphalt Emulsion **RS-2**	GAL.	3.041		
	Surface Treating w/ High Float Rapid Setting Asphalt Emulsion **HFRS-2**	GAL.	3.041		
	Surface Treating w/ Cationic Rapid Setting Asphalt Emulsion **CRS-2**	GAL.		3.044	
	Surface Treating w/ Polymer Modified Rapid Setting Asphalt Emulsion **RS-2p**	GAL.	3.273		
	Surface Treating w/ Polymer Modified High Float Rapid Setting Asphalt Emulsion **HFRS-2p**	GAL.	3.273		
	Surface Treating w/ Polymer Modified Cationic Rapid Setting Asphalt Emulsion **CRS-2p**	GAL.		3.277	

ITEM PRETREAT AGGREGATE, LIQUID BITUMINOUS SURFACE TREAT, PAVER PLACED SURFACE TREAT, MOTOPAVE AND TACK COAT

Base Price = $630 / US Ton

Option	Material	Unit	Suit-Kote Corp.	Midland Asphalt Materials Inc.	Champion Asphalt Maintenance
Hand Spray Application	Hand Spraying w/ Rapid Setting Asphalt Emulsion **RS-2**	GAL.		**3.5510**	
	Hand Spraying w/ High Float Rapid Setting Asphalt Emulsion **HFRS-2**	GAL.		**3.5510**	
	Hand Spraying w/ Cationic Rapid Setting Asphalt Emulsion **CRS-2**	GAL.		**3.5340**	
	Hand Spraying w/ Polymer Modified Rapid Setting Asphalt Emulsion **RS-2p**	GAL.		**3.7840**	
	Hand Spraying w/ Polymer Modified High Float Rapid Setting Asphalt Emulsion **HFRS-2p**	GAL.		**3.7840**	
	Hand Spraying w/ Polymer Modified Cationic Rapid Setting Asphalt Emulsion **CRS-2p**	GAL.		**3.7670**	
	Bituminous Distributor with Operator for Hand Spray Chip Seal Patching	**Fixed Price / Hour**		**85.00**	
FIBERMAT A (SAM)	Fiber Reinforced Surface Treat 1-5,000 SY / DAY	SY		**3.260**	
	Fiber Reinforced Surface Treat 5,001 - 10,000 SY / DAY	SY		**2.460**	
	Fiber Reinforced Surface Treat 10,001 - 20,000 SY / DAY	SY		**2.080**	
	Fiber Reinforced Surface Treat > 20,000 SY	SY		**1.980**	
FIBERMAT B (SAMI)	Fiber Reinforced Surface Treat 1-5,000 SY / DAY	SY		**3.210**	
	Fiber Reinforced Surface Treat 5,001 - 10,000 SY / DAY	SY		**2.410**	
	Fiber Reinforced Surface Treat 10,001 - 20,000 SY / DAY	SY		**2.030**	
	Fiber Reinforced Surface Treat > 20,000 SY	SY		**1.930**	
NOVA CHIP	Paver Placed Surface Treatment **Type A** 1 - 12,500 SY	SY		**5.180**	
	Paver Placed Surface Treatment **Type A** 12,501 - 25,000 SY	SY		**4.860**	
	Paver Placed Surface Treatment **Type A** 25,000 &>	SY		**4.750**	
	Paver Placed Surface Treatment **Type B** 1 - 12,500 SY	SY		**5.250**	
	Paver Placed Surface Treatment **Type B** 12,501 - 25,000 SY	SY		**4.910**	
	Paver Placed Surface Treatment **Type B** 25,000 &>	SY		**4.810**	
	Allowable **DEDUCTION** per square yard if the contracting agency furnishes and operates the compacting equipment.	SY		**0.080**	
	Allowable **DEDUCTION** per square yard if the contracting agency furnished trucking of the Hot Asphalt Mixture to the paver.	SY		**0.200**	
	Asphalt Milling - Optional Incidental	SY		**25.00**	

ITEM PRETREAT AGGREGATE, LIQUID BITUMINOUS SURFACE TREAT, PAVER PLACED SURFACE TREAT, MOTOPAVE AND TACK COAT

Base Price = $630 / US Ton

Option	Material	Unit	Suit-Kote Corp.	Midland Asphalt Materials Inc.	Champion Asphalt Maintenance
MOTOPAVE	Cold Mix/Motopave w/ High Float Medium Setting Asphalt Emulsion **HFMS-2**	GAL.	**3.369**		
	Cold Mix/Motopave w/ High Float Medium Setting Asphalt Emulsion **HFMS-2h**	GAL.	**3.369**		
	Cold Mix/Motopave w/ High Float Medium Setting Asphalt Emulsion **HFMS-2gh**	GAL.	**3.469**		
	Cold Mix/Motopave w/ Cationic Medium Setting Asphalt Emulsion **CMS-2**	GAL.	**3.389**		
	Cold Mix/Motopave w/ Cationic Medium Setting Asphalt Emulsion **CMS-2h**	GAL.	**3.389**		
	Cold Mix/Motopave w/ Cationic Medium Setting Asphalt Emulsion **CSS-1**	GAL.		**3.186**	
	Cold Mix/Motopave w/ Cationic Medium Setting Asphalt Emulsion **CSS-1h**	GAL.		**3.186**	
CRACK SEAL	Polymer Modified Asphalt Joint & Crack Sealant (D6690)	GAL.			**14.940**
	Fiber Reinforced Asphalt Joint & Crack Sealant (PG64-22)	GAL.			**14.740**

	QUANTITY	UNIT	Suit-Kote Corp.	Midland Asphalt Materials Inc.	Champion Asphalt Maintenance	Keeler Construction Co., Inc.	De Cann Dist LLC
TACK COAT	Tack Coat Base Material **CSS-1h**	GAL.		**6.040**	7.35*		
	Tack Coat Base Material **HFMS-2**	GAL.	6.150		5.80*	**4.950**	5.250
	Rapid Breaking Tack Coat	GAL.	6.500	**6.490**		6.500	
	Tack Coat Distributer Equipment Rental	HOUR	$125	**$125**	$125	**$125**	$125

* Trailer Unit: Hand Application ONLY

Base Price = $630 / US Ton

ITEM COLD IN PLACE RECYCLING OF BITUMINOUS PAVEMENTS

TYPE II Recycling

ITEM #	QUANTITY	UNIT	Midland Aphalt Materials Inc.	Suit-Kote Corp.
	Under 10,000 SY @ 3 inches	SY	**2.62**	**2.60**
	Under 10,000 SY @ 4 inches	SY	**2.75**	**2.73**
	Allowable addition for MPOT (<10,000 SY)	SY	**0.36**	**0.37**
	Over 10,000 SY @ 3 inches	SY	**2.30**	**2.21**
	Over 10,000 SY @ 4 inches	SY	**2.28**	**2.26**
	Allowable addition for MPOT (>10,000 SY)	SY	**0.36**	**0.370**
	Cold In Place Emulsion HFMS-2	GAL	**2.960**	**2.960**
	Cold In Place Emulsion HFMS-2p	GAL	**3.260**	**3.260**
	Cold In Place Emulsion HFMS-2 with rejuvinator	GAL		**3.320**
	Cold In Place Emulsion CMS-2	GAL	**2.960**	**2.980**
	Cold In Place Emulsion CMS-2h	GAL	**2.960**	**2.980**

Base Price = $630 / US Ton

ITEM PAVEMENT RECYCLING PUGMILL MIX / CENTRAL PLANT

ITEM #	QUANTITY	UNIT	UNIT PRICE	VENDOR
	Under 10,000 SY @ 3 inches	SY	1.40	**Suit-Kote Corp.**
	Under 10,000 SY @ 4 inches	SY	1.50	**Suit-Kote Corp.**
	Over 10,000 SY @ 3 inches	SY	0.98	**Suit-Kote Corp.**
	Over 10,000 SY @ 4 inches	SY	1.08	**Suit-Kote Corp.**
	Pavement Recycling with HFRA	GAL.	3.180	**Suit-Kote Corp.**
	Cold Mix Bituminous Paver	DAY	2,900	**Suit-Kote Corp.**

ITEM PAVEMENT RECLAMATION FULL DEPTH

ITEM #	QUANTITY	UNIT	UNIT PRICE	VENDOR
	Under 10,000 SY	SY	0.980	**Midland Aphalt Materials Inc.**
	Over 10,000 SY	SY	0.930	**Midland Aphalt Materials Inc.**
	Stabilizing Additive Calcium Chloride	GAL	1.350	**Midland Aphalt Materials Inc.**
	Stabilizing Additive Asphalt Emulsion **HFMS-2**	GAL	2.960	**Midland Aphalt Materials Inc.**

Base Price = $630 / US Ton

ITEM HOT IN PLACE ASPHALT RECYCLING

ITEM #	QUANTITY	UNIT	UNIT PRICE	VENDOR
	Under 10,000 SY @ 3/4 to 2 inch depth	SY	6.42	**Highway Rehab Corp.**
	Over 10,000 SY @ 3/4 to 2 inch depth	SY	4.42	**Highway Rehab Corp.**

ITEM LIQUID CALCIUM CHLORIDE

ITEM #	QUANTITY	UNIT	UNIT PRICE	VENDOR
	Liquid Calcium Chloride (Gravel Road Stabilization)	Gal.	1.29	**Innovative Municipal Products (US) Inc.**
	Liquid Calcium Chloride (Snow & Ice Control)	Gal.	1.17	**Innovative Municipal Products (US) Inc.**

ITEM STABILIZED SHOULDER MATERIAL

ITEM #	QUANTITY	UNIT	UNIT PRICE	VENDOR
	Stabilized Shoulder Material	Gal.	1.05	**Millenium Roads**

ITEM COLD MILLING OF ASPHALT PAVEMENT AND MIXED COMPOSITION AND SUPPLEMENTS

	PRICE PER SQUARE YARD									
	Asphalt Milling					Mixed Composition Milling				
QUANTITY	Option A	Option B	Option C	Option D	Option E	Option F	Option G	Option H	Option I	Option J
Mobilization Fee for Projects Under 1000 SY	$500	$500	$500	$500	$500	$500	$500	$500	$500	$500
1 to 1,000 SY Up to 2 in. depth	$3.72	$5.50	$5.85	$7.00	$6.75	$2.45	$3.60	$4.40	$4.80	$5.60
1001 to 2,000 SY Up to 2 in. depth	$1.65	$2.50	$3.15	$3.75	$3.83	$1.65	$3.60	$2.80	$3.00	$3.00
2,001 to 10,000 SY Up to 2 in. depth	$0.45	$1.25	$2.16	$2.40	$2.61	$1.16	$3.32	$2.52	$2.72	$2.72
Greater than 10,000 SY Up to 2 in. depth	$0.41	$1.20	$2.12	$2.35	$2.48	$1.02	$3.20	$2.40	$2.68	$2.80
VENDOR	**Villager Construction Inc.**	**Villager Construction Inc.**	**Donegal Construction Corp.**	**Villager Construction Inc.**	**Donegal Construction Corp.**	**Villager Construction Inc.**	**Donegal Construction Corp.**	**Donegal Construction Corp.**	**Donegal Construction Corp.**	**Donegal Construction Corp.**
Additional Charge for each additional 1 in. depth over 2 in. Fixed Price @ .05/Inch	$0.05	$0.05	$0.05	$0.05	$0.05	$0.05	$0.05	$0.05	$0.05	$0.05

SUPPLEMENTAL MILLING ITEMS:

DESCRIPTION	UNIT	UNIT PRICE	VENDOR	UNIT PRICE	VENDOR
Milling Head Change	FIXED PRICE	$400	Villager Construction Inc.	$400	Donegal Construction Corp.
Supply Water (< 4 Hrs.)	1/2 Day	$550	Villager Construction Inc.	$1,000	Donegal Construction Corp.
Supply Water (> 4 Hrs.)	Full Day	$800	Villager Construction Inc.	$1,200	Donegal Construction Corp.

***** These prices will ONLY be charged when the item is requested by the authorizing agency

ITEM MOTORIZED SWEEPING

DESCRIPTION	UNIT	UNIT PRICE	VENDOR
Motorized Maintenance Sweeping (non-construction)	1000 LF	$39.00	SPEZIO Property Service Inc.
Motorized Construction Sweeping	Per Hour	$160.00	SPEZIO Property Service Inc.
Emergency After Hours Call Out Sweeping	Each Location	$333.00	SPEZIO Property Service Inc.

ITEM CONCRETE GUTTER VARIOUS OPTIONS

			PRICE PER SQUARE YARD			
ITEM #	**QUANTITY**	**UNIT**	**Option A**	**Option B**	**Option C**	**Option D**
	0 to 50	SY	151.25	149.98	132.25	78.80
	51 to 250	SY	139.15	125.98	115.00	73.88
	Over 251	SY	121.00	113.98	103.50	59.10
	Reconstruct Drop Inlet (w/ gutter replacement) 0 - 1	LF	363.00	329.95	316.25	270.88
	Reconstruct Drop Inlet (w/ gutter replacement) > 1	LF	423.50	389.94	373.75	320.13
	VENDOR		**Hynes Concrete Contractor Inc.**	**Hynes Concrete Contractor Inc.**	**Hynes Concrete Contractor Inc.**	**Hynes Concrete Contractor Inc.**

ITEM CONCRETE SIDEWALKS VARIOUS OPTIONS

			PRICE PER SQUARE YARD			
ITEM #	**QUANTITY**	**UNIT**	**Option A**	**Option B**	**Option C**	**Option D**
	Concrete Sidewalk Replacement	SY	66.15	65.25	59.85	50.40
	Detectable Warnings	fixed price	300.00	300.00	300.00	300.00
	Additional price for **Steel Reinforcement**	fixed price / SY	4.00	4.00	4.00	4.00
VENDOR			**Espana Enterprises LLC**	**Espana Enterprises LLC**	**Espana Enterprises LLC**	**Espana Enterprises LLC**

ITEM CONCRETE CURB VARIOUS OPTIONS

			PRICE PER FOOT	
ITEM #	**QUANTITY**	**UNIT**	**Option A**	**Option B**
	0 - 100	LF	40.00	28.80
	100 - 500	LF	35.00	24.00
	Over 500	LF	30.00	19.20
VENDOR			**Hynes Concrete Contractor Inc.**	**Hynes Concrete Contractor Inc.**

ITEM STONE CURB VARIOUS OPTIONS

			PRICE PER LF				
ITEM #	**QUANTITY**	**UNIT**	**Option A**	**Option B**	**Option C**	**Option D**	**Option E**
	0 - 500	LF	83.53	65.73	77.68	53.78	47.80
	Over 500	LF	77.10	53.78	71.70	41.83	35.85
		VENDOR	**Espana Enterprises LLC**	**Espana Enterprises LLC**	**Espana Enterprises LLC**	**Espana Enterprises LLC**	**Espana Enterprises LLC**

ITEM RECONSTRUCT DROP INLET

ITEM #	**QUANTITY**	**UNIT**	**UNIT PRICE**
	0 - 1	LF	780.00
	0 - 2	LF	715.00
	0 - 3	LF	650.00
	0 - 4	LF	552.50
	> 0 - 4	LF	487.50
		VENDOR	**Sunshine Concrete Co. Inc.**

ITEM TREE SERVICE

ITEM #	PROCESS	SIZE (inch)	UNIT PRICE
	Tree Removal	14 and <	127.49
		15 -24	339.96
		25 - 36	424.95
		37 - 48	531.19
		49 and >	616.18
	Stump	Any Size	212.48
	Tree Trimming	Any Size	127.49
	Emergency Surcharge		254.97
		VENDOR	Birchcrest Tree & Landscape, Inc.

ITEM HYDROSEEDING

ITEM #		UNIT	0 - 10,000	10,001 -30,000	> 30,000
	Hydroseed and Mulch (non grass areas)	SF	0.075	0.052	0.0450
	Reclamation Mix	SF	0.075	0.052	0.0450
	Revitalization Mix	SF	0.075	0.052	0.0450
	Water Furnish and applied to the hydroseeded area	GAL.	0.090	0.090	0.0900
		VENDOR	Cardinal Lawn & Landscape Inc	Cardinal Lawn & Landscape Inc	Cardinal Lawn & Landscape Inc

ITEM SLICE SEEDING

ITEM #	PROCESS	UNIT	UNIT PRICE	VENDOR
	Slice Seeding	SF	0.07	R. M. Landscape Inc.
	Option 1: Watering	Gal	0.10	R. M. Landscape Inc.
	Option 2: Core Aerate	SF	0.06	R. M. Landscape Inc.

ITEM SOIL CUTTING AND REMOVAL

ITEM #	PROCESS	UNIT	UNIT PRICE	VENDOR
	Soil Cutting and Removal Rental	Half Day	550.00	R. M. Landscape Inc.
	Soil Cutting and Removal Rental	Full Day	970.00	R. M. Landscape Inc.
	Mobilization	Fixed	150.00	R. M. Landscape Inc.

ITEM TREE & SHRUB VARIOUS OPTIONS

			Option A	Option B	Option C
ITEM #	QUANTITY	UNIT	**Furnish & Deliver**	**Furnish & Plant**	**Furnish, Plant & Guarantee**
	Norway Maple	EACH	205.00	340.00	360.00
	Red Maple	EACH	235.00	395.00	460.00
	Northern Red Oak	EACH	265.00	395.00	495.00
	Pin Oak	EACH	235.00	340.00	365.00
	Thornless Cockspur Hawthorne	EACH	180.00	230.00	245.00
	Washington Hawthorne	EACH	180.00	230.00	245.00
	Colorado Blue Spruce	EACH	130.00	285.00	320.00
	Austrian Pine	EACH	100.00	200.00	240.00
	Dense Spreading Yew	EACH	35.00	45.00	65.00
	Dark American Arborvitae	EACH	70.00	120.00	135.00
		VENDOR	Cardinal Lawn & Landscape Inc	Cardinal Lawn & Landscape Inc	Cardinal Lawn & Landscape Inc

Option A: Furnish and deliver the specified trees and shrubs to project sites within Monroe County.

Option B: Furnish, deliver and plant the specified trees and shrubs without a guarantee. Including plant materials; excavation; soil preparation and conditioning; staking and mulching.

Option C: Furnish, deliver and plant the specified trees and shrubs with a one-year guarantee. Including plant materials; excavation; soil preparation and conditioning; staking and mulching.

ITEM PAVERS, ROLLERS, PAVER OPERATOR, SCREEDMAN, ROLLER OPERATOR, HEAVY LABORER

MATERIAL	Unit	All County Construction	Hanson Aggregates NY LLC	Iroquois Rock Products	Keeler Construction Co. Inc.	Minority Material Haulers Inc	Rochester Asphalt Materials	Villager Construction Inc.
Standard Paver Rental	Full Day	1,850	2,000	1,800	2,100	1,750	1,800	1,850
Standard Paver Rental	Half Day	1,450	1,500	1,400	1,550	1,350	1,400	1,375
Sidewalk Paver Rental	Full Day	1,250	1,500	1,300	1,550	1,250	1,300	1,425
Sidewalk Paver Rental	Half Day	1,250	1,250	1,250	1,550	1,250	1,250	1,275
Roller Rental -10 Ton Roller	Full Day	850	1,200	700	950	650	700	625
Roller Rental -10 Ton Roller	Half Day	850	1,000	500	950	650	500	525
Roller Rental -5 Ton Roller	Full Day	650		475	600	400	475	450
Roller Rental -5 Ton Roller	Half Day	650		375	600	400	375	375
Paver Operator Straight Time	Hour	95	90	92	100	90	92	95.00
Paver Operator Over Time	Hour	117	135	115	140	115	115	120.00
Screedman Straight Time	Hour	90	90	92	90	80	92	90.00
Screedman Overtime	Hour	112	135	115	125	100	115	115.00
Roller Operator Straight Time	Hour	95	90	85	100	90	85	90.00
Roller Operator Overtime	Hour	117	135	112	140	115	112	115
Heavy Laborer Straight Time	Hour	90	90	85	90	80	85	85
Heavy Laborer Overtime	Hour	112	135	112	125	100	112	115

ITEM STORM SEWER CLEANING & FLUSHING

PROCESS	Pay Unit	Unit Price LIGHT	Unit Price MEDIUM	Unit Price HIGH	Vendor
Storm Sewer Cleaning / Flushing 8” Dia.	Foot	No Bid	No Bid	No Bid	
Storm Sewer Cleaning / Flushing 12” Dia.	Foot	No Bid	No Bid	No Bid	
Storm Sewer Cleaning / Flushing 15” Dia.	Foot	No Bid	No Bid	No Bid	
Storm Sewer Cleaning / Flushing 18” Dia.	Foot	No Bid	No Bid	No Bid	
Storm Sewer Cleaning / Flushing 24” Dia.	Foot	No Bid	No Bid	No Bid	
Storm Sewer Cleaning / Flushing 30” Dia.	Foot	No Bid	No Bid	No Bid	
Storm Sewer Cleaning / Flushing 36” Dia.	Foot	No Bid	No Bid	No Bid	
Storm Sewer Cleaning / Flushing 42” Dia.	Foot	No Bid	No Bid	No Bid	
Storm Sewer Cleaning / Flushing 48” Dia.	Foot	No Bid	No Bid	No Bid	
EMERGENCY AFTER HOURS SURCHARGE Amount to be added to the unit price above	Lump Sum	No Bid	No Bid	No Bid	

ITEM STORM SEWER TELEVISING

PROCESS	Pay Unit	Unit Price	Vendor
Storm Sewer Televising and Recording 8” Dia.	Foot	No Bid	
Storm Sewer Televising and Recording 12” Dia.	Foot	No Bid	
Storm Sewer Televising and Recording 15” Dia.	Foot	No Bid	
Storm Sewer Televising and Recording 18” Dia.	Foot	No Bid	
Storm Sewer Televising and Recording 24” Dia.	Foot	No Bid	
Storm Sewer Televising and Recording 30” Dia.	Foot	No Bid	
Storm Sewer Televising and Recording 36” Dia.	Foot	No Bid	
Storm Sewer Televising and Recording 42” Dia.	Foot	No Bid	
Storm Sewer Televising and Recording 48” Dia.	Foot	No Bid	

Asphalt Price Adjustment

April 2015 Index

Month	Index $/US Ton
Sept. 2014	630 Base Index
Jan.	N/A
Feb	N/A
Mar	572.00
Apr	561.00
May	
Jun	
Jul	
Aug	
Sep	
Oct	
Nov	
Dec	

ITEM LIQUID BITUMINOUS SURFACE TREAT, PAVER PLACED SURFACE TREAT, MOTOPAVE AND TACK COAT

April 2015 Index Price = $561 US Ton

OPTION	MATERIAL	UNIT	Suit-Kote Corp.	Midland Asphalt	Champion Asphalt Maintenance
PRETREATMENT OF SURFACE TREATMENT AGGREGATE	Pretreating Surface Treatment Aggregate DEC 50	GAL.	1.820	1.770	
	Pretreating Surface Treatment Aggregate MC 30	GAL.		4.811	
	Pugmill Rental – Full Day (8 hrs.)	Full Day	2,200.00	2,400.00	
	Pugmill Rental – Hourly	Hour	275.00	300.00	
	Mobilization Fee	Fixed Price	400.00	400.00	
SURFACE TREAT A	Surface Treating w/ Rapid Setting Asphalt Emulsion **RS-2**	GAL.	2.637		
	Surface Treating w/High Float Rapid Setting Asphalt Emulsion **HFRS-2**	GAL.	2.637		
	Surface Treating w/Cationic Rapid Setting Asphalt Emulsion **CRS-2**	GAL.		2.634	
	Surface Treating w/Polymer Modified Rapid Setting Asphalt Emulsion **RS-2p**	GAL.	2.869		
	Surface Treating w/Polymer Modified High Float Rapid Setting Asphalt Emulsion **HFRS-2p**	GAL.	2.869		
	Surface Treating w/Polymer Modified Cationic Rapid Setting Asphalt Emulsion **CRS-2p**	GAL.		2.867	
SURFACE TREAT B	Surface Treating w/ Rapid Setting Asphalt Emulsion **RS-2**	GAL.	2.847		
	Surface Treating w/High Float Rapid Setting Asphalt Emulsion **HFRS-2**	GAL.	2.847		
	Surface Treating w/Cationic Rapid Setting Asphalt Emulsion **CRS-2**	GAL.		2.844	
	Surface Treating w/Polymer Modified Rapid Setting Asphalt Emulsion **RS-2p**	GAL.	3.079		
	Surface Treating w/Polymer Modified High Float Rapid Setting Asphalt Emulsion **HFRS-2p**	GAL.	3.079		
	Surface Treating w/Polymer Modified Cationic Rapid Setting Asphalt Emulsion **CRS-2p**	GAL.		3.077	

ITEM LIQUID BITUMINOUS SURFACE TREAT, PAVER PLACED SURFACE TREAT, MOTOPAVE AND TACK COAT

April 2015 Index Price = $561 US Ton

OPTION	MATERIAL	UNIT	Suit-Kote Corp.	Midland Asphalt	Champion Asphalt Maintenance
Hand Spray Application	Hand Spraying w/ Rapid Setting Asphalt Emulsion **RS-2**	GAL.		3.551	
	Hand Spraying w/High Float Rapid Setting Asphalt Emulsion **HFRS-2**	GAL.		3.551	
	Hand Spraying w/Cationic Rapid Setting Asphalt Emulsion **CRS-2**	GAL.		3.334	
	Hand Spraying w/Polymer Modified Rapid Setting Asphalt Emulsion **RS-2p**	GAL.		3.590	
	Hand Spraying w/Polymer Modified High Float Rapid Setting Asphalt Emulsion **HFRS-2p**	GAL.		3.590	
	Hand Spraying w/Polymer Modified Cationic Rapid Setting Asphalt Emulsion **CRS-2p**	GAL.		3.567	
	Bituminous Distributor with Operator for Hand Spray Chip Seal Patching	Fixed Price / Hour		$85	
FIBERMAT A (SAM)	Fiber Reinforced Surface Treat 1-5,000 SY / DAY	SY		3.180	
	Fiber Reinforced Surface Treat 5,001 - 10,000 SY / DAY	SY		2.380	
	Fiber Reinforced Surface Treat 10,001 - 20,000 SY / DAY	SY		2.000	
	Fiber Reinforced Surface Treat > 20,000 SY	SY		1.900	
FIBERMAT B (SAMI)	Fiber Reinforced Surface Treat 1-5,000 SY / DAY	SY		3.130	
	Fiber Reinforced Surface Treat 5,001 - 10,000 SY / DAY	SY		2.330	
	Fiber Reinforced Surface Treat 10,001 - 20,000 SY / DAY	SY		1.950	
	Fiber Reinforced Surface Treat > 20,000 SY	SY		1.850	

ITEM LIQUID BITUMINOUS SURFACE TREAT, PAVER PLACED SURFACE TREAT, MOTOPAVE AND TACK COAT

April 2015 Index Price = $561 US Ton

OPTION	MATERIAL	UNIT	Suit-Kote Corp.	Midland Asphalt	Champion Asphalt Maintenance
NOVA CHIP	Paver Placed Surface Treatment **Type A** 1 - 12,500 SY	SY		5.009	
	Paver Placed Surface Treatment **Type A** 12,501 - 25,000 SY	SY		4.689	
	Paver Placed Surface Treatment **Type A** 25,000 &>	SY		4.579	
	Paver Placed Surface Treatment **Type B** 1 - 12,500 SY	SY		5.079	
	Paver Placed Surface Treatment **Type B** 12,501 - 25,000 SY	SY		4.739	
	Paver Placed Surface Treatment **Type B** 25,000 &>	SY		4.639	
	Allowable **DEDUCTION** per square yard if the contracting agency furnishes and operates the compacting equipment.	SY		0.080	
	Allowable **DEDUCTION** per square yard if the contracting agency furnished trucking of the Hot Asphalt Mixture to the paver.	SY		0.200	
	Asphalt Milling - Optional Incidental	SY		25.00	
MOTOPAVE	Cold Mix/Motopave w/High Float Medium Setting Asphalt Emulsion **HFMS-2**	GAL.	3.148		
	Cold Mix/Motopave w/High Float Medium Setting Asphalt Emulsion **HFMS-2h**	GAL.	3.169		
	Cold Mix/Motopave w/High Float Medium Setting Asphalt Emulsion **HFMS-2gh**	GAL.	3.240		
	Cold Mix/Motopave w/Cationic Medium Setting Asphalt Emulsion **CMS-2**	GAL.	3.162		
	Cold Mix/Motopave w/Cationic Medium Setting Asphalt Emulsion **CMS-2h**	GAL.	3.162		
	Cold Mix/Motopave w/Cationic Medium Setting Asphalt Emulsion **CSS-1**	GAL.		3.019	
	Cold Mix/Motopave w/Cationic Medium Setting Asphalt Emulsion **CSS-1h**	GAL.		3.018	
CRACK SEAL	Polymer Modified Asphalt Joint & Crack Sealant (D6690)	GAL.			14.776
	Fiber Reinforced Asphalt Joint & Crack Sealant (PG64-22)	GAL.			14.461

April 2015 Index Price = $561 US Ton

Tack Coat

QUANTITY	UNIT	UNIT PRICE	VENDOR: Suit-Kote Corp.	Midland Asphalt Materials Inc.	*Champion Asphalt Maintenance	Keeler Construction Co., Inc.	De Cann Dist LLC
Tack Coat Base Material **CSS-1h**	GAL.	UNIT PRICE		**5.872**	7.182		
Tack Coat Base Material **HFMS-2**	GAL.	UNIT PRICE	6.032		5.682	**4.832**	5.172
Rapid Breaking Tack Coat	GAL.	UNIT PRICE	6.338	**6.048**			
Tack Coat Distributer Equipment Rental	HOUR	$125	***Rental / Hour applicable to all***				

*** Trailer Unit: Hand Application ONLY**

TYPE II Recycling

QUANTITY	UNIT	UNIT PRICE	VENDOR	UNIT PRICE	VENDOR
Under 10,000 SY @ 3 inches	SY	2.62	**Midland Asphalt Materials Inc.**	2.60	**Suit-Kote Corp.**
Under 10,000 SY @ 4 inches	SY	2.75	**Midland Asphalt Materials Inc.**	2.73	**Suit-Kote Corp.**
Allowable Addition for MPOT (<10,000 SY)	SY	0.36	**Midland Asphalt Materials Inc.**	0.37	**Suit-Kote Corp.**
Over 10,000 SY @ 3 inches	SY	2.300	**Midland Asphalt Materials Inc.**	2.210	**Suit-Kote Corp.**
Over 10,000 SY @ 4 inches	SY	2.280	**Midland Asphalt Materials Inc.**	2.260	**Suit-Kote Corp.**
Allowable Addition for MPOT (<10,000 SY)	SY	0.360	**Midland Asphalt Materials Inc.**	0.370	**Suit-Kote Corp.**
Cold In Place Emulsion HFMS-2	GAL	2.739	**Midland Asphalt Materials Inc.**	2.739	**Suit-Kote Corp.**
Cold In Place Emulsion HFMS-2p	GAL	3.066	**Midland Asphalt Materials Inc.**	3.066	**Suit-Kote Corp.**
Cold In Place Emulsion HFMS-2 with rejuvinator	GAL			3.099	**Suit-Kote Corp.**
Cold In Place Emulsion CMS-2	GAL	2.733	**Midland Asphalt Materials Inc.**	2.753	**Suit-Kote Corp.**
Cold In Place Emulsion CMS-2h	GAL	2.733	**Midland Asphalt Materials Inc.**	2.753	**Suit-Kote Corp.**

April 2015 Index Price = $561 US Ton

ITEM PAVEMENT RECYCLING PUGMILL MIX / CENTRAL PLANT

QUANTITY	UNIT	UNIT PRICE	VENDOR
Under 10,000 SY @ 3 inches	SY	1.40	**Suit-Kote Corp.**
Under 10,000 SY @ 4 inches	SY	1.50	**Suit-Kote Corp.**
Over 10,000 SY @ 3 inches	SY	0.98	**Suit-Kote Corp.**
Over 10,000 SY @ 4 inches	SY	1.08	**Suit-Kote Corp.**
Pavement Recycling with HFRA	GAL.	2.974	**Suit-Kote Corp.**
Cold Mix Bituminous Paver	DAY	2,900	**Suit-Kote Corp.**

ITEM PAVEMENT RECLAMATION FULL DEPTH

QUANTITY	UNIT	UNIT PRICE	VENDOR
Under 10,000 SY	SY	0.980	Midland Asphalt Materials Inc.
Over 10,000 SY	SY	0.930	Midland Asphalt Materials Inc.
Stabilizing Additive Calcium Chloride	GAL	1.350	Midland Asphalt Materials Inc.
Stabilizing Additive Asphalt Emulsion **HFMS-2**	GAL	2.739	Midland Asphalt Materials Inc.

TERMS AND CONDITIONS

BID ITEM: **2015 HIGHWAY MATERIALS – GROUP I**

FOR: **Department of Transportation**

PURCHASING CONTACT: The Buyer, identified below, is the sole point of contact regarding this Bid from the date of issuance until the bids are opened and the results made public.

Sharon Berndt
Monroe County Division of Purchasing
200 County Office Building
39 West Main Street
Rochester, NY 14614
Email: sberndt@monroecounty.gov

All requests for bid clarification must be submitted in writing to the Buyer referenced above and received no later than close of business (5:00 PM Eastern Standard Time) on **Friday, December 19, 2013**.

All questions will be answered and documented in writing as an Addendum to the Bid. These will be sent out to all Bidders who received the original Bid no later than **Friday, December 26, 2014**.

DUPLICATE COPIES: **PLEASE SUBMIT YOUR BID IN DUPLICATE; THE ORIGINAL AND ONE (1) COPY.**

BID INFORMATION: At the time of bid, the bidder shall supply detailed specifications covering the item(s) contained herein and shall clearly indicate any areas in which item or items offered do not fully comply with the specifications contained herein.

SUBMITTAL OF FORMAL PROPOSAL: Bid proposal must be legible and submitted in the original form, bearing an original signature. **EMAILS AND FACSIMILES ARE NOT ACCEPTABLE.**

All bidders must submit proof that they have obtained the required **Workers' Compensation** and **disability benefits** coverage or proof that they are exempt if awarded the contract.

SPECIFICATION ALTERATIONS: Specifications will be construed to be complete and be considered the entire description of the goods or services upon which Monroe County is now seeking bids. **Only formal written addenda can materially alter this set of specifications**. No verbal statement made by a Monroe County employee or anyone else is binding nor shall such statement be considered an official part of this public bid proposal.

NYS WAGE RATES: Pursuant to the provision of Section 220-A of the New York State Labor Law, as amended, the Contractor (and related Subcontractors) will be obligated to pay all workers in the covered classes only the applicable prevailing wage rates and supplements. The minimum hourly wage rate to be paid the various classes of labor performing work under this contract shall be in accordance with schedules which have been established or may hereafter be established or increased, by the New York State Department of Labor during the contract term. **Refer to NYS Wage Schedule PRC# 2014011032 developed for this project.**

QUANTITIES: The quantities listed are the estimated annual requirements and should not be construed to represent either maximum or minimum quantities to be ordered during the contract term.

BRAND REFERENCE: References to a manufacturer's product by brand name or number are done solely to establish the minimum quality and performance characteristics required. Bidders may submit bids on alternates, but must attach two (2) copies of manufacturer specifications for any alternate at the time of the bid. Further, the bidder must demonstrate that the alternate proposed has a sufficient operating track record to show the equipment will perform per the specified brand. The acceptance of a bidder's alternate rests solely with Monroe County.

QUALIFIED BIDDER: Each bidder must be prepared to present satisfactory proof of his capacity and ability to perform this contract. Such proof may include, but is not limited to, an inspection of the bidder's facilities and equipment, financial statements, references and performance of similar contracts. **The Purchasing Manager reserves the right to reject any bid where the bidder cannot satisfy the County as to their ability to perform. Monroe County reserves the right to reject any and all bids** if the Monroe County Purchasing Manager deems said action to be in the best interests of Monroe County.

METHOD OF AWARD: Monroe County intends to award one or more contract(s) to the lowest responsive and responsible bidder(s). The County reserves the right to award the bid as a **whole or by Group or item, whichever method is in the best interest of the County. Separate awards will be considered only when the price offered is great enough to offset the additional costs inherent to multiple contracts.** Bidders **are not required to bid on every Item included in the bid; however, they must bid on every line within each Item in order to be considered**. **The County reserves the right to reject any and all bids** if the Purchasing Manager deems said action to be in the best interest of the County.

CONTRACT TERM: Contract will start with the date of the contract award and run through **February 29, 2016**, with the option to renew the contract up to four (4) additional twelve (12) month periods with the mutual consent of both parties.

PRICE CHANGES: Price changes may be proposed by either party no later than forty-five (45) days prior to contract extension, based upon manufacturer price changes which must be supported with documentation. Should price changes not be acceptable to both parties, the contract will not be extended. Prices may change only at the time of extension.

MINIMUM ORDER: No minimum order is specified for this contract. Agencies must be able to order as needed. **Political subdivisions and others authorized by law may participate in this contract**.

DELIVERY: All deliveries to be F.O.B. Monroe County to agency as specified by a Purchase Order. Delivery costs must be built into the unit prices bid. Deliveries must be made within **two (2) weeks** after receipt of purchase order number. The County reserves the right to terminate the contract in the event the specified delivery time is not met.

PURCHASE ORDER ISSUANCE: Delivery of services may be directed by the receipt of a Purchase Order only. **Items that are not part of this bid will not be paid for by Monroe County**. As to all purchase orders issued by Monroe County, exceptions may only be authorized, in writing, by the Purchasing Manager or his authorized agent prior to delivery.

BILLING PROCEDURE: All invoices for items sold any authorized agency as a result of this contract must be billed in the following manner: Purchase Order #, Quantity, Description of Item Purchased, BP#, Item #, Extension and Total. **ALL INVOICES MUST BE MARKED WITH THE PURCHASE ORDER NUMBER. INVOICES WITHOUT THIS INFORMATION WILL NOT BE PROCESSED FOR PAYMENT.**

WARRANTY/ GUARANTEE: All warranties by manufacturer shall apply. Bidder shall, as part of its proposal, furnish its warranty/guarantee for all goods/services to be furnished hereunder. As a minimum, Bidder shall warrant all goods for a period of one (1) year from date of acceptance. Bidder shall be obligated to repair or replace all defects in material or workmanship which are discovered or exist during said period. All labor, parts and transportation shall be at Bidder's expense.

SECURITIES AND INSURANCE: Any Certificate of Insurance, Bonds or other forms of security required by this bid are to be submitted to the Purchasing Manager no later than ten (10) normal business days following the date of notification of award. Documents must be received by the close of business, 5:00 PM, on that day.

COMPLIANCE WITH THE LAW: The Contractor agrees to procure all necessary licenses and permits. The Contractor shall comply with all laws, rules and regulations pertaining to the payment of wages and all other matters applicable to the work performed under this contract.

UNCONTEMPLATED PURCHASES: Monroe County reserves the right to request separate bids for such quantities of items on this contract that may be best procured via separate public bid offering and to otherwise act in furthering its own best interests.

SUBCONTRACT: The Contractor shall not subcontract any work without first obtaining the written consent of the Monroe County Purchasing Manager.

RELATED ITEMS: The County reserves the right to add miscellaneous related items to this contract during the contract term upon agreement by both parties as to the price. Approval must be given in writing by the Purchasing Manager or his Designee.

REPORT OF PURCHASE: The Contractor must, upon request, provide the County Purchasing Manager with detailed information showing how much of each item was delivered, to any and all agencies under this contract. This includes deliveries to not only the County but any other municipality or agency which orders from this contract.

OTHER AGENCIES: The Contractor(s) **must** honor the prices, terms and conditions of this contract with political subdivisions or districts located in whole or in part within Monroe County. In addition, the contractor **may**, but is not required to, extend the prices, terms and conditions of this contract to any political subdivision or district located in New York State. Usage of this contract by any of these other political subdivisions or districts will have to be coordinated between that subdivision or district and the contractor. Orders placed against this contract between any subdivision or district will be contracts solely between the Contractor(s) and those entities. Monroe County will not be responsible for, nor will it have any liability or other obligation for, such contract between the Contractor(s) and any third party.

INDEMNIFICATION: The Contractor agrees to defend, indemnify and save harmless the County, its officers, agents, servants and employees from and against any and all liability, damages, costs or expenses, causes of action, suits, judgments, losses and claims of every name not described, including attorneys' fees and disbursements, brought against the County which may arise, be sustained, or occasioned directly or indirectly by any person, firm or corporation arising out of or resulting from the performance of the services by the Contractor, arising from any act, omission or negligence of the Contractor, its agents and employees, or arising from any breach or default by the Contractor under this Agreement. Nothing herein is intended to relieve the County from its own negligence or misfeasance or to assume any such liability for the County by the Contractor.

INSURANCE REQUIREMENTS
INDEMNIFICATION

The Contractor shall procure and maintain at his own expense until final completion of the work covered by the Contract, insurance for liability for damages imposed by law of the kinds and in the amounts hereinafter provided, issued by insurance companies authorized to do business in the State of New York, covering all operations under the Contract whether performed by the Contractor or by his subcontractors. Monroe County must be named as Additional Insured on the General Liability and Motor Vehicle policies. The ACORD form shall name Monroe County as additional insured and certificate holder. **The General Liability and Motor Vehicle policies shall also include separate endorsement(s) naming Monroe County as an Additional Insured**.

Within ten (10) days after notice of award, the Contractor shall furnish to the County a certificate or certificates of insurance in a form satisfactory to the Monroe County Attorney (a sample form is attached to these specifications) showing that he has complied with all insurance requirements set forth herein, which certificate or certificates shall provide that the policies shall not be changed or canceled until thirty (30) days written notice has been given to the County. Except for Workers' Compensation Insurance, no insurance required herein shall contain any exclusion of municipal operations performed in connection with the Contract resulting from this bid solicitation. The kinds and amounts of insurance are as follows:

A. **WORKERS' COMPENSATION AND DISABILITY INSURANCE:** A policy covering the operations of the Contractor in accordance with the provisions of Chapter 41 of the Laws of 1914, as amended, known as the Workers' Compensation Law, covering all operations under Contract, whether performed by him or by his subcontractors. The Contract shall be void and of no effect unless the person or corporation making or executing same shall secure compensation coverage for the benefits of, and keep insured during the life of said Contract, such employees in compliance with the provisions of the Worker's Compensation Law known as the Disability Benefits Law (Chapter 600 of the Laws of 1949) and amendments hereto.

B. **LIABILITY AND PROPERTY DAMAGE INSURANCE:**

(1) CONTRACTOR'S GENERAL LIABILITY INSURANCE issued to the Contractor and covering the liability for damages imposed by law upon the Contractor with respect to all work performed by him under the within Contract. All of the following coverages shall be included:

Comprehensive Form
Premises-Operations
Products/Completed Operations
Contractual Insurance covering the Hold Harmless Provision
Broad Form Property Damage
Independent Contractors
Personal injury

(2) Unless otherwise specifically required by special specifications, each policy shall have limits of not less than the following:

BODILY INJURY LIABILITY Each Occurrence	PROPERTY DAMAGE LIABILITY Each Occurrence	AGGREGATE
$1,000,000	$1,000,000	$3,000,000

C. **MOTOR VEHICLE INSURANCE** issued to the Contractor and covering public liability and property damage on the Contractor's vehicles in the amount of:

BODILY INJURY LIABILITY Each Occurrence	PROPERTY DAMAGE LIABILITY Each Accident
$1,000,000	$1,000,000

A sample insurance certificate is included with these specifications. All categories and amounts of insurance required for this bid project have been checked off on the sample. These are the minimum requirements that the Contractor must supply. Failure to supply a satisfactory certificate within ten (10) days after receipt of Notice of Award may result in the cancellation of the award.

Rev. 5/23/2012

Below are Monroe County accepted Workers' Comp forms and Disability Benefits:

Worker's Comp Forms (obtain from (www.wcb.ny.gov)

1) C-105.2 (or U-26.3)
2) SI-12 (or GSI 105.2)
3) CE-200

Disability Benefits Insurance (obtain from (www.wcb.ny.gov)

1) DB-120.1
2) DB-155
3) CE-200

Monroe County Department of Transportation

2015 Highway Material Group I

Technical Specifications

The specification item description will provide the reference between the technical specification and the price bid sheet proposal.

ITEM _____ LIQUID BITUMINOUS (Surface Treatment and Cold Mix/Motopave)

Description

The work will involve the furnishing, delivering, and applying bituminous materials through an approved distributor for application in surface treating pavements; or for constructing a cold mix bituminous pavement on a prepared base in accordance with these specifications at any point in Monroe County. The liquid bituminous materials will be provided and paid for by the gallon, The liquid bituminous for surface treating will be provided with or without an aggregate spreader as indicated in the item option. The liquid bituminous for cold mix/motopave paving will include an approved cold mix paver.

MATERIAL

All materials shall meet the requirements of Section 702, Bituminous materials, Section 703 Coarse Aggregates, Bituminous cold mix shall meet the requirements of section 405of the NYSDOT Standard Specification.

The bituminous material shall be obtained from a primary source/supplier that has been approved by the NYSDOT materials bureau. The liquid bituminous material for surface treatment shall be selected by the contractor from the following list.

702-3101	RS-2	Rapid Setting Asphalt Emulsion
702-3102	HFRS-2	High Float Rapid Setting Asphalt Emulsion
702-4101	CRS –2	Cationic Rapid Setting Asphalt Emulsion
702-3701	RS-2p	Polymer Modified Rapid Setting Asphalt Emulsion
702-3801	HFRS-2p	Polymer Modified High Float Rapid Setting Asphalt Emulsion
702-4702	CRS-2p	Polymer Modified Cationic Rapid Setting Asphalt Emulsion
702-3301	HFMS-2	High Float Medium Setting Asphalt Emulsion
702-3401	HFMS-2h &2gh	High Float Medium Setting Asphalt Emulsion
702-4201	CMS-2	Cationic Medium Setting Asphalt Emulsion
702-4301	CMS-2h	Cationic Medium Setting Asphalt Emulsion
702-4401	CSS-1	Cationic Slow Setting Asphalt Emulsion
702-4401	CSS-1h	Cationic Slow Setting Asphalt Emulsion
702-4601	CQS-1h	Cationic Quick Setting Asphalt Emulsion

If polymer modifiers are chosen for use the bitumen content shall be determined by the laboratory performing the mix designs. The minimum polymer modifier content shall be 3% polymer solids, based on bitumen weight. The polymer material shall be milled or blended into the asphalt of blended into the emulsifier solution prior to the emulsification process.

Aggregates for each process will be purchased and delivered by the agency. All aggregates shall conform to the requirements of section 703-02. The agency will select the size designation of aggregate stone to be used. Sampling and testing of the aggregate shall be the responsibility of the contractor.

Equipment

All equipment shall be maintained in satisfactory working condition at all times.

Liquid Bituminous Material Distributor. The liquid bituminous distributor shall be a bituminous distributor that has been calibrated within the previous 12 months for transverse and longitudinal application rate by ASTM-D2995. The distributor shall be equipped, maintained, and operated so that the bituminous material can be applied at controlled temperature and rates from 0.16 to 6.36 liters per sq meter. The distributor shall uniformly apply the material to the specified rate with a maximum allowed variation of 0.063 liters per square meter.

ITEM _____ LIQUID BITUMINOUS (Surface Treatment and Cold Mix/Motopave)

Aggregate Spreader The aggregate spreader shall be a self-propelled unit capable of uniformly spreading the aggregate at the required rate on a minimum width of 6 inches wider than the width of the lane to be treated. The spreader shall be calibrated, within the previous 12 months, for transverse and longitudinal application using several sheets of canvass each being 1 foot by 3 feet and a portable scale, similar to ASTM-D2995 for bituminous distributors.

Paver The bituminous asphalt vendor will provide a self-propelled paver capable of producing, mixing , and placing a cold mix bituminous pavement. The paver shall meet the requirements of Section 405 of the NYSDOT Standard Specification latest revision.

Preparation of the Surface

All areas to be treated will be prepared by the agency. Any portion of the existing pavement surface to be treated deemed to be deficient by the contractor and agreed to by the agency shall receive as additional treatment by either application of fog seal or an additional single surface treatment.

METHOD OF MEASUREMENT

The liquid bituminous material shall be the number of 60 degree F. gallons of specified material applied and in place.

BASIS OF BID

The unit price bid per gallon for surface treating shall include all costs of furnishing, delivering, heating and applying the bituminous material through an approved bituminous distributor: the bid will include options with or without the cost of an approved self-propelled aggregate spreader.

Option A The bid price per gallon **will not** include the cost of an aggregate spreader.
Option B The bid price per gallon **will** include the cost of an aggregate spreader

The unit price bid per gallon for motopave/cold mix emulsions shall include the cost of an approved motopave/cold mix.

BASIS OF AWARD

The County will award by each individual item as shown in the proposal section.

ASPHALT PRICE ADJUSTMENTS:

Asphalt price adjustments will be made according to the provisions provided in the asphalt adjustment appendix. Each oil used in the treatment is eligible for adjustments according to the provisions contained in the appendix.

ITEM _____ LIQUID BITUMINOUS (Surface Treatment and Cold Mix/Motopave)

PAYMENT

Payment will be made under the following items by the gallon, Surface treat emulsions will be either Option A or B.

Description	
Surface treat using RS-2	Rapid Setting Asphalt Emulsion
Surface treat using HFRS-2	High Float Rapid Setting Asphalt Emulsion
Surface treat using CRS –2	Cationic Rapid Setting Asphalt Emulsion
Surface treat using RS-2p	Polymer Modified Rapid Setting Asphalt Emulsion
Surface treat using HFRS-2p	Polymer Modified High Float Rapid Setting Asphalt
Surface treat using CRS-2p	Polymer Modified Cationic Rapid Setting Asphalt
Cold Mix/Motopave using HFMS-2	High Float Medium Setting Asphalt Emulsion
Cold Mix/Motopave using HFMS-2h	High Float Medium Setting Asphalt Emulsion
Cold Mix/Motopave using HFMS-2gh	High Float Medium Setting asphalt Emulsion
Cold Mix/Motopave using CMS-2	Cationic Medium Setting Asphalt Emulsion
Cold Mix/Motopave using CMS-2h	Cationic Medium Setting Asphalt Emulsion
Cold Mix/Motopave using CSS-1	Cationic Slow Setting Asphalt Emulsion
Cold Mix/Motopave using CSS-1h	Cationic Slow Setting Asphalt Emulsion
Cold Mix/Motopave using CQS-1h	Cationic Quick Setting Asphalt Emulsion

ITEM HAND SPRAY APPLICATION OF BITUMINOUS MATERIALS

SCOPE

The specification is intended to provide hand spray application of bituminous materials with an operator for use in spray patching of various areas.

MATERIAL

The bituminous material shall be obtained from a primary source/supplier that has been approved by the NYSDOT materials bureau. The liquid bituminous material for surface treatment shall be selected by the contractor from the following list.

702-3101	RS-2	Rapid Setting Asphalt Emulsion
702-3102	HFRS-2	High Float Rapid Setting Asphalt Emulsion
702-4101	CRS –2	Cationic Rapid Setting Asphalt Emulsion
702-3701	RS-2p	Polymer Modified Rapid Setting Asphalt Emulsion
702-3801	HFRS-2p	Polymer Modified High Float Rapid Setting Asphalt Emulsion
702-4702	CRS-2p	Polymer Modified Cationic Rapid Setting Asphalt Emulsion

If polymer modifiers are chosen for use the bitumen content shall be determined by the laboratory performing the mix designs. The minimum polymer modifier content shall be 3% polymer solids, based on bitumen weight. The polymer material shall be milled or blended into the asphalt of blended into the emulsifier solution prior to the emulsification process.

Aggregates for the process will be purchased, delivered and spread by the agency. All aggregates shall conform to the requirements of section 703-02. The agency will select the size designation of aggregate stone to be used. Sampling and testing of the aggregate shall be the responsibility of the contractor.

Equipment

All equipment shall be maintained in satisfactory working condition at all times.

Maintenance and Protection of Traffic:

The Contractor shall be responsible for the maintenance and protection of traffic in accordance with the current Manual of Uniform Traffic Control Devices (MUTCD) and supplements.

BASIS OF BID

Under this item the unit bid price shall be the cost per gallon to apply bituminous materials with a distributor and operator using hand spray methods for spray patching in surface treat applications. **The cost of the distributor and operator shall be paid at a fixed rate of $85.00/hour.** The cost per gallon to apply each material shall be based on the fixed operator and distributor rate. The charge for the distributor and operator shall include time at the project location for all costs incurred in applying specific material, including waiting time with an approved bituminous distributor. It shall be agreed upon as per the number of hours charged for each project at the end of the working period by the General Foreman, or his authorized representative. **This shall not include time to and from job site or mechanical breakdown of the distributor**. This item shall only be utilized with the application of the materials listed in the material section of the specification. The unit price for the hand spray distributor and operator will be by the hour.

BASIS OF AWARD

The County will award by each individual item as shown in the proposal section.

ASPHALT PRICE ADJUSTMENTS:

Asphalt price adjustments will be made according to the provisions provided in the asphalt adjustment appendix.

PAYMENT

Payment will be made under the following items by the gallon.

Description	UNIT
Hand spray application usingRS-2 (Rapid Setting Asphalt Emulsion)	Gallon
Hand spray using HFRS-2 (High Float Rapid Setting Asphalt Emulsion)	Gallon
Hand Spray using CRS –2 (Cationic Rapid Setting Asphalt Emulsion)	Gallon
Hand Spray using RS-2p (Polymer Modified Rapid Setting Asphalt Emulsion)	Gallon
Hand spray using HFRS-2p (Polymer Modified High Float Rapid Setting Asphalt Emulsion)	Gallon
Hand spray using CRS-2p (Polymer Modified Cationic Rapid Setting Asphalt Emulsion)	Gallon
Distributor and Operator	fixed price

DESCRIPTION. The work shall consist in the construction of a fiber reinforced bituminous membrane surface treatment known as "**FiberMat – Type A**" as a Stress Absorbing Membrane, SAM and as "**FiberMat- Type B**" when used as a Stress Absorbing Membrane Interlayer, SAMI. This is accomplished by using a specific applicator, which can be mounted on an asphalt distributor modified for applying the surface treatment of bituminous binder reinforced with glass fibers. The applicator comprises an open bottomed spray bar housing fan or blower for producing a down draft in the housing, and at least one spray bar mounted on the housing and adapted to extend transversely in the direction of movement of the asphalt distributor on which the unit can be mounted.
A number of nozzles spaced longitudinally along the spray bar for spraying bituminous material, means of controlling the nozzles, and a number of sources for dispensing the cut glass fibers through the open bottomed housing to the surface of the bituminous material previously sprayed shall also be included.

Asphalt emulsion, aggregate and in-place chopped fibers are combined to form a versatile treatment, ideal for sealing as a SAM and arresting severely alligator cracked surfaces. The in-place chopped fiber gives the surface an improved tensile strength and resilience.
When applied within the pavement structure the fiber reinforced bituminous membrane surface treatment acts as a SAMI for the treatment of reflective cracking prior to the construction or placement of subsequent layers.

MATERIALS

Bituminous Materials

A. Bituminous Material Approval. The bituminous material shall be obtained from a storage facility that has been approved by the Director, Materials Bureau within the current calendar year, before the start of work.

B. Bituminous Material Selection. The selected bituminous material shall be compatible with the aggregate to be used. It is the contractor's responsibility to ensure compatibility between the bituminous material and the aggregate. The selection of bituminous material shall be subject to the approval of the NYSDOT, Materials Bureau Engineer, and conform to the standards below with the following exceptions.

1. **Surface Treatment**

Material Designation	Grade	Description
702-4701	CRS-1P	Polymer modified cationic asphalt emulsion or where appropriate
	CRS2P	Polymer modified cationic asphalt emulsion

Elastic recovery, 10°C – minimum 60%.

Aggregates. The aggregates for the fiber reinforced bituminous membrane surface treatment shall conform to the requirements of NYSDOT Item Section 703-02, " Coarse Aggregate" and be from an approved source. Where aggregates for pavement surface treatment are from more than one source or of more than on type of material, they shall be proportioned and blended to provide a uniform mixture.

The regional Director or the authorized representative shall approve the procedure used for this proportioning.

Where the fiber reinforced bituminous membrane surface treatment is to be considered as a SAM then the aggregate size shall be Size 1ST, 3/8" or Size 1A or a combination of both as in a double dressing.

Where the fiber reinforced bituminous surface treatment is to be considered as a SAMI, then the aggregate size shall be Size1A only.

In both cases the aggregate shall meet one of the following:

1. Limestone having an acid insoluble content of not less than 20%, excluding particles of chert and similar siliceous rocks. Blends of siliceous and non-siliceous and non-siliceous limestone will not be permitted.
2. Dolomite.
3. Sandstone, granite, chert, trap rock, ore tailings, or other non-carbonate materials.
4. Gravel, or a natural or manufactured blend of two or more of the following types of material; limestone, dolomite, gravel, sandstone, granite, chert, tarp rock, ore tailings, slag or other similar materials meeting the following requirements
   - Non-carbonate plus 3.2mm particles must comprise a minimum 10% of the total aggregate (by weight with adjustments to equivalent volumes for materials of different specific gravities).
   - For Size 1A a minimum of 20% of plus 4.75mm particles must be non-carbonate.
   - For Size 1 ST a minimum of 20% of plus 9.5mm particles must be non-carbonate.

Polymer modifier. The ideal amount of solid or dry polymer modifier shall be 3%, based on the asphalt weight. The polymer materials shall be milled or blended into the asphalt or blended with the "soap phase" or post added to the emulsion but at all times ensuring good homogenization of the polymer with in the asphalt emulsion.

Fiber. The glass fiber is E Class from an approved source determined by the license holder. The glass fiber spools are supplied internally wound, in coils or cheeses. Typically the spools are cut in-place into nominally 60mm,(2.38”) lengths which are distributed uniformly across and between the two parallel applications of modified asphalt emulsion. Glass fiber spread rates are up to 120g/sqm, (4oz), with additional asphalt emulsion rates of spread, depending on the site requirements.

CONSTRUCTION DETAILS

A. Weather and Seasonal Limitations. The fiber reinforced bituminous membrane surface treatment may be applied on a dry or damp surface, but should not be laid where there is standing water or on a wet surface. Application should only be undertaken when the surface temperature is at least 10°C, (50°F), and rising, subject to site inspection. Greater initial traffic speed control may be required in certain circumstances, for example when the surface temperature is low.

The fiber reinforced bituminous membrane surface treatment shall be placed normally in New York during the period May 1st to the third Saturday in September. Application outside of these times is permissible only with the approval of the contractor and local Engineer.

B. Equipment. The following equipment shall be required:

1. Bituminous Material Distributor.

A vehicle mounted liquid bituminous fiber applicator is used for applying a surface treatment of bituminous binder with reinforced glass fibers. The applicator shall comprise an open bottomed spray bar housing, a fan or blower producing a down draft in the housing, and at least one spray bar mounted on the housing and adapted to extend transversely in the direction of movement of the vehicle on which the applicator is mounted. A number of nozzles spaced longitudinally along the spray bar for spraying binder material, means for controlling the nozzles, and a number of sources for dispensing cut glass fiber through the open bottomed housing to the surface of the binder material previously sprayed shall also be included.

The applicator shall have been calibrated within the previous 12 months for transverse and longitudinal distribution application rates according to ASTM D2995, Practice for Determining Application Rate of Bituminous Applicator or other suitable method. The bituminous fiber applicator shall be equipped, maintained, and operated so that the bituminous materials can be applied at controlled rates from 0.11 l/m2 (0.022gal/SY) to 2.5 l/m2 (0.56gal/SY). The fiber is applied at controlled rates from nominally 30 to 120g/m2 (approx.1-4oz/SY). These applications shall be such that a uniform first layer of asphalt emulsion is applied followed by uniform layer of glass fibers that is chopped in-place and covered with a uniform second layer of asphalt emulsion.

2. **Self-propelled aggregate spreader.** Aggregate spreader shall be a self-propelled unit capable of uniformly spreading the aggregate at the required rate on a minimum width of 150mm wider than the width of the lane to be treated. The spreader shall meet the approval of the Engineer and be calibrated similar to the test method used in ASTM D2995, within the previous 12 months, for transverse and longitudinal distribution.

3. **Pneumatic tire roller.** The Engineer will require a sufficient number of pneumatic tire rollers to permit the initial rolling of the aggregate to occur within 5 minutes of the application of the fiber reinforced bituminous membrane surface treatment. The pneumatic roller shall be self-propelled and have oscillating wheels with smooth tread tires and will have a minimum ballasted weight of 9 metric tons or 10 US tons. The tire pressure for all wheels shall be uniform within 2psi. The rollers shall be operated at a maximum speed of 8 km/hr, (5mph). To prevent pick-up of the aggregate on the tires, the tires shall be kept moistened with water mixed with small quantities of detergent or other material approved by the Engineer. In no case shall a solvent having an effect upon the fiber reinforced bituminous membrane surface treatment be used.

4. **Static steel-wheel rollers** shall be self-propelled and be either 9 to 11 metric ton tandem three-axle type or 7 to 9 ton tandem two-axle type. This shall be used particularly when a SAMI application is specified for the fiber reinforced bituminous membrane surface treatment following the pneumatic tire roller. The aim is to crush the aggregate and blind the surface prior to the application of the new overlay.

5. **Self-propelled Rotary Power Broom** A self-propelled rotary power broom shall so be designed, equipped, maintained and operated so that the pavement surface can be swept clean. The broom shall have an adjustment to control downward pressure. The power broom shall meet the approval of the Engineer. In the case where a SAMI is being overlaid the same or following day then a Vacuum sweeper shall be used only.

C. Determination of the Quantities of Materials to be Applied In conjunction with the Engineer the Contractor will decide upon the appropriate rates of asphalt emulsion and fiber for and during the job. Typical rates of application for the asphalt emulsion range from 1.8-2.7L/m2 (0.4-0.6 Gal/SY) and fiber application rates from 30-120g/m2 (approx. 1-4oz/SY).

1 For SAM applications the aggregate shall be of the 6mm, 10mm or 12.5mm maximum size and be added at rates as per conventional chip sealing operations – typically (11-13kg/m2 ---approx.12-26lb/SY).

2 For SAMI applications only the 6mm maximum size aggregate is used at typically (6-8kg/m2 --- 10-15lb/SY) to bind in the surface if it is to be overlaid within a few weeks. Otherwise higher aggregate application rates are employed and approved with the local engineer.

D. Preparation of Surface. A self-propelled power broom shall be used to clear any loose material from the surface to be treated immediately prior to the application of the fiber reinforced bituminous membrane surface treatment. Any surface-defects such, as potholes shall be repaired prior to commencement of works. Manhole covers, drop inlets, catch basins, curbs and any structure within the roadway area shall be protected against the fiber reinforced bituminous membrane surface treatment. Any cracks greater than ¼" shall be pre-treated with approved hot or cold polymer modified bituminous crack filler. Information on suitable crack fillers for use in-conjunction with the fiber reinforced bituminous membrane surface treatment can be given by the license holder.

E. Application of the fiber reinforced bituminous membrane surface treatment. Fibers and bituminous materials shall be applied by means of pressure distributor in a uniform, continuous spread over the section to be treated and within the temperature range, sandwiching the in-place chopped fibers between the two layers of asphalt emulsion. The quantities of fibers and bituminous materials shall be decided between the Engineer and Contractor dependant on the job site. The distributor shall be moving forward at the proper application speed at the time the spray bar and fiber chopper bars are opened. If any skipped areas or deficiencies occur, the operation shall be immediately stopped. Junctions of spreads shall be carefully made to assure a smooth riding surface and the deficient areas corrected in a manner approved by the Engineer. Overlaps of the membrane shall be made up to 6".

The fiber reinforced bituminous membrane surface treatment shall not be applied more than 50 meters, (150ft), in advance of the self-propelled chip spreader.
Under no circumstances shall operations proceed in such a manner that the fiber reinforced bituminous membrane surface treatment will be allowed to chill, set-up, dry or otherwise impair retention of the cover aggregate. Traffic will not be allowed to run on the unprotected fiber reinforced bituminous membrane surface treatment.
The distributor, when not spreading, shall be parked so that the spray bar or mechanism will not drip on the surface of the traveled way.

F. Application of the Cover Aggregate. Immediately following the application of the fiber reinforced bituminous membrane surface treatment, cover aggregate shall be spread at the rate agreed between the Engineer and Contractor. Spreading shall be accomplished in such a manner that the tires of the aggregate spreader at no time contact the uncovered and newly applied fiber reinforced bituminous membrane surface treatment.
Immediately after the cover aggregate is spread, any deficient areas shall be covered by additional material. Pneumatic tire rolling shall begin immediately. The initial pass shall be completed within 5 minutes of the application of the fiber reinforced bituminous membrane surface treatment and shall be continued until three complete passes are obtained within 30 minutes of the application of the fiber reinforced bituminous membrane surface treatment. Pneumatic tire rollers shall come to a complete stop prior to a change in direction. For overlaps

the first pass of aggregate and the space uncovered shall be up to 6”. Upon the return pass the aggregate coverage shall be complete and over by up to 6” to insure full coverage of the membrane.

G. Opening to Traffic. "Loose Stone" signs meeting requirements of current Manual of Uniform Traffic Control Devices (MUTCD) and supplements shall be posted at 1.6 km (1 mile), intervals throughout the length of the project. These signs shall be erected before treatment commences and removed after contract is accepted.

Unless otherwise specified, the highway shall be kept open to traffic at all times. Traffic shall be discontinued on the lane being surface treated; and as soon as the final layer is applied and rolled, controlled traffic may be permitted thereon. "Loose Stone" signs meeting requirements of (MUTCD) and supplements shall be posted at 1.6 km (1 mile), intervals throughout the length of the project. Traffic shall be maintained at a speed not to exceed 24km/h, (15mph) for a period of four hours after placement of the fiber reinforced bituminous membrane surface treatment using two-way radio-equipped patrol vehicles in accordance with the maintenance and protection of traffic details shown on the plans. All patrol vehicles shall be equipped with signs meeting the requirements of section 254.5 of the Manual of Uniform Traffic Control Devices.

Immediately after completion of the fiber reinforced bituminous membrane surface treatment, the section shall be posted for speed limit of 48km/h, (30mph), for a period of three days. The signs should be posted at 800-meter (0.5mile) intervals and signs showing other speed limitations should be covered for this period. All construction signs shall meet the requirements of the MUTCD and supplements.

METHOD OF MEASURMENT. Fiber reinforced bituminous membrane surface treatment will be measured by the number of square meters of compacted material in place making no deductions for minor untreated areas such as catch basins and manholes.

BASIS OF PAYMENT.

Fiber reinforced surface treatment. The unit price bid per square yard per day, plus the addition of any items the Agency requires the Contractor to furnish. The following items will be performed by the Agency, unless otherwise directed:

A. Manhole covers, water valves, catch basins, and other drainage structures shall be clearly referenced for location and adjustment.
B. Thermoplastic traffic markings shall be removed.
C. All vegetation at the edge of the pavement shall be removed.
D. Compaction equipment with operator.
E. Furnish aggregate delivered to the Chip-Spreader.
F. Maintenance and Protection of Traffic.
G. Furnish self propelled Power Broom or Vacuum.

Price Adjustments. The asphalt price adjustment applies to the CRS-1P and CRS-2P of the liquid portion of the item applied to Fiber Reinforced Bituminous Membrane Surface Treatment. The price adjustment per gallon shall be multiplied by a factor .4 to calculate the price adjustment per square yard.

$$\text{Price Adj. Per SY} = \frac{\text{New Avg. FOB Terminal Price} - \text{Base Avg. Terminal Price}}{235} \times \text{Total Allowable Petroleum \%} \times .4$$

ITEM ____ PAVER PLACED SURFACE TREATMENT (NOVA CHIP)

DESCRIPTION: The Paver Placed Surface Treatment consists of a warm polymer modified emulsion sprayed immediately preceding the application of a hot mix asphalt wearing course which forms a homogeneous well-textured durable wearing surface that can be quickly opened to traffic. The finished surface treatment has a normal thickness of:

TYPE	Nominal Thickness
A	3/8”
B	5/8”
C	¾”

MATERIALS:

a. Hot Mix Asphalt Wearing Course. The requirements of Section 401 - Plant Mix pavements - General and Section 402 - Quality Control Asphalt Concrete - General apply, except as modified herein. The Marshall Mix Property Criteria in § 401-2.02 do not apply. The Producer shall formulate a job mix formula that satisfies the design limits listed in Table 1 - Mixture Requirements and submit it to the Director for approval. The production tolerances in Table 1 will not be permitted to exceed the design limits.

b. TABLE 1 - MIXTURE REQUIREMENTS

	Type A			Type B		Type C	
Sieve Sizes (in)	Sieve Sizes (mm)	Design Limits % passing	Production Tolerance %	Design Limits % passing	Production Tolerance %	Design Limits % passing	Production Tolerance %
¾”	19.0					100	±4
½”	12.5			100	±4	85-100	±4
3/8”	9.5	100	±4	85-100	±4	60-90	±4
¼”	6.3	85-100	±3	30-50	±3	30-50	±3
#4	4.75	40-60	±3	24-40	±3	24-40	±3
#8	2.36	21-32	±3	21-32	±3	21-32	±3
#16	1.18	16-26	±2	16-26	±2	16-26	±2
330	0.600	12-20	±2	12-20	±2	12-20	±2
#50	0.300	8-16	±2	8-16	±2	8-16	±2
#100	0.150	5-10	±2	5-10	±2	5-10	±2
#200	0.075	5-7		5-7		5-7	
	%PGB	% Asphalt 4.9-5.3		% Asphalt 4.8-5.2		% Asphalt 4.8-5.2	

Note 1: All aggregate percentages are based on total weight of the aggregate.

1. Asphalt Binder. The liquid material shall be a cationic, rapid setting, asphalt emulsion, NYS item 702-4001 except as modified in **Data Table I – Polymer Modified Asphalt Emulsion.** The emulsion shall be obtained from a storage facility that has been approved by the Director of the Materials Bureau, NYSDOT, within the calendar year, prior to the start of work.

2. Coarse Aggregate. The Coarse Aggregate shall meet the requirements of §703-02-Coarse Aggregate in addition to the following requirements listed below. The wearing course shall be a mixture of single size coarse aggregate, fine aggregate, mineral filler and asphalt cement. The single size coarse aggregate shall be nominal ¼" for Type-A mix, nominal 3/8" for Type-B mix or nominal ½"for Type-C mix, according to the gradation specifications in **Data Table II**. The hot mix asphalt concrete shall be obtained from a facility that has been approved by the Director of the Materials Bureau, NYSDOT, within the calendar year, prior to the start of work. The asphalt content of the mix shall be 4.8-5.3% by weight of the total mix and must be computed based on the actual job mix.

Coarse aggregates used shall be from approved sources and shall meet one of the following requirements:

a. Limestone having an acid insoluble residue content of not less than 20%, excluding particles of chert and similar siliceous rocks.

b. Dolomite having an acid insoluble residue content of not less than 17%, excluding particles of chert and similar siliceous rocks.

c. Crushed Gravel or blends of two or more of the following types of materials: crushed gravel, limestone, dolomite, sandstone, granite, chert, traprock, ore tailings, slag or similar materials. These aggregates must meet the following requirements: For Paver Placed Surface Treatment mixes - not less than 20% (by weight with adjustments to equivalent volume for material of different specific gravities) of the total coarse aggregate particles (plus 3.2 mm material) shall be non-carbonade. Non carbonate particles are defined as those having an acid insoluble residue content not less than 80%.

d. Where coarse aggregates for these mixes are from more than one source or of more than one type of material, they shall be proportioned and blended to provide a uniform mixture. The single size coarse aggregate shall be nominal 6.3mm, 9.5mm or 12.5mm meeting the following gradation requirements:

TABLE 2 - COARSE AGGREGATE - GRADATION

Total % Passing by Weight

	Screen Size	Type A (6.3mm)	Type B (9.5mm)	Type C (12.5mm)
¾'	19.0mm			100
½"	12.5mm		100	85-100
3/8"	9.5mm	100	85-100	25-50
¼"	6.3mm	85-100	0-15	0-15
#4	4.75mm	25-50	0-3	0-3
#8	2.36mm	0-3	0	0-2

TABLE 3 - COARSE AGGREGATE PROPERTIES for light to medium duty traffic

Property	Method	Requirement
LA Abrasion Coefficient, Max. % Loss	ASTM C131	<25
Water absorption %	ASTM C127	<2
Flatness Index %	NFP 18-561	<20
Flatness Coefficient (G/E) note1	NFP 18-561	<1.59
Crushing Ratio %	observation	100
Overall Cleanliness (% passing #30)	ASTM C142	<2
Resistance to striping note 2	ASTM D3625	>95

Note 1:Where "G" is the smallest square opening through which the particle can pass and "E" is the smallest slot through which the particles can pass.
Note 2: Anti striping agents may be required to provide acceptable values

3. Fine Aggregate. The Crushed Fine Aggregate shall meet the requirements of § 703-01 Fine Aggregate and have a minimum sand equivalency of 60, as determined by ASTM D2419. The fine aggregate shall meet the following gradation requirements:

TABLE 4 - FINE AGGREGATE GRADATION

Screen Size		% Passing
#4	4.75mm	100
#8	2.36mm	90-100
#16	1.18mm	60-80
#30	0.60mm	45-60
#50	0.30mm	30-40
#100	0.15mm	20-30
#200	0.075mm	15-25

Sand equivalency, % min (ASTM D2419)

4. Mineral Filler. The Mineral Filler, if required may be hydrated lime, Fly ash or bag house fines 100% passing #100, 80% passing #200. and shall meet the requirements of § 703-08 Mineral Filler.

5. Modified Asphalt Emulsion Binder. Use grade CRS-1 (702-4001) Asphalt Emulsion modified with polymer and meeting the requirements of § 702 Bituminous Materials except as modified with polymer and meeting the requirements of § 702 Bituminous Materials except in Table % - asphalt prior to the emulsification process.

TABLE 5 - MODIFIED ASPHALT EMULSION BINDER MATERIAL PROPERTIES

Property	Method	Minimum	Maximum
Polymer Content, %Mass of Total Residue	-	3.0	-
Viscosity at 25 deg. C, SSF	ASTM D244	20	100
Total Residue by Distillation @ 175 deg. C	ASTM D244	63	-
Demulsibility	ASTM D244	40	-

B. Equipment.

1. Paving. The Contractor shall use a self-priming Paver appearing on the Department's Approved List. The self-priming paver must be capable of spraying the modified asphalt emulsion binder, applying the hot asphalt overlay and smoothing the surface of the mat in one pass at the rate of 35 – 100 ft/minute. The self-priming paver must incorporate a receiving hopper, feed conveyor, insulated storage tank for asphalt emulsion, metered emulsion, spray bar and a variable width, heated, ironing-type screed. The screed must have the ability to be crowned at the center both positively and negatively and have vertically adjustable extensions to accommodate the desired pavement profile. Direct equipment approval requests to the Director, Materials Bureau, at least 30 days prior to the start of work.

2. Compaction. Compaction shall be performed by using a steel wheeled double drum rollers weighing at least 10 tons, which are equipped with functioning water systems and scrapers to prevent the fresh mix from adhering to the roller drums.

CONSTRUCTION DETAILS

A. Surface Preparation: The Contractor will perform the following surface preparation prior to applying the wearing course except where noted:

1. Cover all manhole covers, water boxes, catch basins and other such utility structures with plastic or building felt. Reference each for location and adjustment after paving.
2. Remove all standing water. A damp surface is acceptable if favorable weather conditions are expected during paving operations. The contactor shall guarantee bonding to any damp surfaces.
3. Thoroughly clean the entire area to be overlaid. Power rotary broom sweeping or vacuuming may be required.
4. The removal of thermoplastic traffic markings, flush filling of cracks and joint, and the filling of surface irregularities to be overlaid shall be done by the owner or paid for under the appropriate items.

B. Application. The minimum pavement surface temperature for application of the modified asphalt emulsion binder and placement of the wearing course is 50 deg. C and rising..

1. Apply the modified asphalt emulsion binder at a temperature of 140-180 deg. F. Provide a uniform application across the entire width to be overlaid, at a rate of 0.20 +/- 0.05 gallons /SY. Continuously monitor the rate of spray.
2. No equipment shall come in contact with the modified asphalt emulsion binder before the hot mix asphalt concrete wearing course is applied.
3. Immediately after applying the modified asphalt emulsion binder, apply the hot mix asphalt overlay across the full width of the modified asphalt emulsion binder at a temperature of 315 +/- deg. F.
4. The typical application rate of the hot asphalt aggregate mixture will be;
   Type A (nominal ¼") 60 +/- 10 lbs /sy
   Type B (nominal 3/8") 65 +/- 10 lbs /sy,
   Type C (nominal ½") 70 +/- 10 lbs /sy.

C. Compaction.

Begin compaction immediately after application of the wearing course. Use a minimum of two passes Compaction of wearing course shall be carried out using a minimum of a double drum roller of minimum deadweight of 10 ton, before the material temperature has fallen below 180 deg. F. at mid-layer.. The roller(s) will not be allowed to stop on the freshly placed wearing course. Use an adequate number of rollers to complete compaction before the pavement temperature falls below 180 deg. F. The wearing coarse must be protected from traffic until the rolling operation is complete and the material has cooled sufficiently to resist damage. Because of the speed of the paving machine, two double drum rollers are necessary if the project is over 10,000 square yards.

D. Verification of Quantities and Testing.

At the end of each work day or job site, a check shall be made to determine the quantities used of tack/seal coat. The check shall be made by means of calibrated load cells on the machine. The total mass or material shall be divided by the total area sprayed. Asphalt concrete spread rate shall be calculated by dividing the tonnage laid (from asphalt tickets) by the area covered.

E. Milling: (Optional Incidental)

The contractor shall be equipped to mill as directed by the Associate Engineer or his / her designee.

A. Along gutters / curbs for proper reveal
B. Transitions to existing pavement and side streets.
C. For the removal of thermoplastic traffic markings

Coordination of the sweeping activities shall be the responsibility of the agency. The milling will be paid as an option by the square yard.

MAINTENANCE AND PROTECTION OF TRAFFIC:

The agency shall be responsible for the maintenance and protection of traffic in accordance with the current Manual of Uniform Traffic Control Devices (MUTCD) and supplements.
The vendor will be responsible for maintenance and protection of traffic during delivery and pickup of the unit from the project site, in accordance with the current Manual of Uniform Traffic Control Devices (MUTCD) and supplements.

BASIS OF BID:

Paver Placed Surface Treatment (Nova Chip): Bidders are requested to submit prices per square yard for the two mix types (Type A - 6.3mm, B - 9.5mm). The square yard range is for total square yards constructed on any single project or work site in Monroe County.

Milling – Optional Incidental: Bidders are requested to submit price per square yard. (This item is an incidental option. Only vendors who bid on the Paver Placed Surface Treatment (Nova Chip) will be eligible to bid)

ASPHALT PRICE ADJUSTMENTS:

Asphalt price adjustments will be made according to the provisions provided in the asphalt adjustment appendix.

METHOD OF PAYMENT:

Item No.	Description	Pay Unit
	Paver Placed Surface Treatment (hot mix asphalt wearing course placed)	Square Yard
	Asphalt Milling - Optional Incidental	Square Yard

ITEM _____ POLYMER MODIFIED ASPHALT JOINT AND CRACK SEALANT:

Scope

This specification covers joint sealants of the hot-poured type intended for use in sealing joints and cracks in portland cement concrete and asphalt concrete pavements.

General:

The work shall consist of cleaning and sealing cracks and joints in the existing pavement. All sealant shall be an asphalt cement. The Contractor shall provide a listing of municipal and/or private projects where installation of ASTM D3450 or D6690 has occurred over the last two years. Before beginning the work the Contractor will be required to demonstrate to the satisfaction of the Associate Engineer - Highways, compliance with the specification.

Description:

The work to be done shall consist of performing all operations and furnishing all labor, equipment and materials for cleaning and sealing miscellaneous cracks and joints in the pavement using ASTM D3405. The work shall commence within seven days from receipt of order to seal.

Materials:

The material used shall meet the following requirements:

ASTM Standard D6690 Testing Joint Sealants, Hot-poured, for Concrete and Asphalt Pavements.

General Requirements

The joint sealant shall be composed of a mixture of materials that will form a resilient and adhesive compound capable of effectively sealing joints and cracks in concrete and sphaltic pavements against the infiltration of moisture and foreign material throughout repeated cycles of expansion and contraction with temperature changes, and that will not, at ambient temperatures, flow from the joint or be picked up by vehicles tires. The material shall be capable of being brought to a uniform pouring consistency suitable or completely filling the joints without inclusion of large air holes or discontinuities and with out damage to the material. It shall remain relatively unchanged at pouring temperature in the field.

Physical Requirements

Safe Heating Temperature. The safe heating temperature is the highest temperature to which the sealant can be heated and still conform to all the requirements specified herein. For purpose of testing as specified hereafter, the pouring temperature shall be the same as safe heating temperature. The safe heating temperature shall be set forth by the manufacturer and shall be shown on all containers and shall be provided to the testing agency before any laboratory tests are begun.

Penetration at 77°F (25°C), 150g, 5s, shall not exceed 90.

Flow at 140°F (60°C) shall not exceed 3.0mm.

Bond. The sealant shall be tested at -20°F (-29°C) for three complete cycles. The development at any time during the test procedure of a crack, separation, or other opening that at any point is over ¼" (6.4mm) deep, in the sealer or between the sealer and mortar block, shall constitute failure of the test specimen. The depth of the crack, separation, or opening shall be measured perpendicular to the side of the sealer showing the defect. All three specimens must meet this requirement for bond.

As an alternative to the bond test as specified, the specifying agency may permit testing at 0°F (-17.8°C) in the alternative procedure. Methods D6690.

Resilience. When tested at 77°F (25°C), the recovery shall be a minimum of 60%.

Asphalt Compatibility. There shall be no failure in adhesion, formation of an oily exudate at the interface between the sealant and the aphaltic concrete, or softening or other deletorious effects on the asphaltic concrete or sealant when tested at 140°F (60°C).

Packaging and Marking: The sealing compound shall be delivered in the manufacturer's original sealed containers. Each container shall be legibly marked with the name of the manufacture, the tradename of the dealer, the manufacturer's batch number or lot, the pouring temperature and the safe heating temperature.

Test Methods:

The physical requirements enumerated in this specification shall be determined in accordance with Methods D3407.

CONSTRUCTION DETAILS

Heat, haul, deliver (in hot oil-heated, containerized, mobile tanks), clean cracks (air compressor with minimum 125 cfm), and seal cracks at the locations. Vendor to supply and operate all equipment, including that required to clean and seal cracks. Only well defined, single cracks shall be sealed. Sealing shall be limited to cracks not less than one eighth inch wide not more than one inch wide, at locations as directed by the Engineer or agency representative. Cracks with varying widths, portions of which are one eighth inch wide or greater, shall be sealed along their entire length.

Longitudinal cracks in the travel lane shall be sealed, Centerline cracks, cracks between lanes, and edge or pavement cracks may be filled or sealed. Where secondary cracking exists, seal only the primary (widest) crack. Do not seal secondary cracks, or excessive material width and thickness will result.

All cracks shall be thoroughly cleaned of dust, dirt, foreign material, sand and any other extraneous materials by high pressure air or a hot air lance. When using a hot air lance, care shall be taken so as not to burn, scorch or ignite the adjoining pavement to prevent recontamination of the crack. The crack sides shall appear thoroughly clean and dry immediately prior to sealing. The Vendor shall be ordered to re-clean cracks, if in the opinion of the agency representative, adequate cleaning and drying is not evident. Any cracks not sealed the same day shall be re-cleaned prior to sealing.

Cracks shall be sealed by placing the applicator wand in or directly over the crack recess and carefully discharging the sealant just to fill the crack. The material shall be struck off flush with

the pavement surface using a sealing shoe and/or "V" shaped squeegee pressed firmly against the roadway surface.

Only a narrow, thin "film" or material shall be permitted on the pavement surface, no greater than two inches wide and one thirty-second inch thick. Sealant in excess of the specified thin "film" amount shall be removed from the pavement surface and disposed of properly, at the Contractor's expense.

Traffic shall not be allowed on the sealant until it has cooled sufficiently and will not track. A low pressure, light spray of water may be used to accelerate cooling of the filler or sealant. Blotting with fine aggregate will not be allowed.

Sealant that becomes damaged from traffic or from the removal of over applied amounts shall be repaired. The areas shall be cleaned with high pressure air and then have additional sealant applied to the satisfaction of the Engineer or agency representative, at the Vendor's expense. Deficient areas where sealant has sunk into the crack more than three eighths inch below the pavement surface shall be cleaned with high pressure air and additional sealant installed to the satisfaction of the Engineer or Agency representative, at the bid price. Cleaning of damaged or deficient areas shall not require removal of the sealant from a crack that has been sealed.

Qualification of Bidders:

a. All bidders will be required to have a minimum of 2 years experience installing hot fiber reinforced asphalt sealing similar to those specified in this contract.

b. Within 3 working days of request by the County, The bidder must present evidence of experience as an asphalt sealant contractor for jobs equivalent to those of this contract and possessing financial standing, plant, machinery and equipment adequate to handle this project. The bidder must provide a list of contract work performed within the last 2 years.

Roads To Be Crack Sealed: Roads to be crack sealed will be designated by the Associate Engineer - Highways.

Maintenance and Protection of Traffic: The Contractor shall be responsible for the maintenance and protection of traffic in accordance with the current Manual of Uniform Traffic Control Devices (MUTCD) and supplements.

a. The working hours of construction may have to be restricted on arterial functional classification streets. In general, lane reduction may be prohibited during the peak rush traffic hours of 7:00 AM to 9:00 AM and 4:00 PM to 6:00 PM Monday through Friday. The Contractor shall exhibit the ability to maintain adequate traffic flows to the satisfaction of the Associate Engineer - Highways.

b. Temporary no parking signs may be necessary to facilitate traffic flows or crack seal curb lanes. The Contractor shall provide these temporary signs. The construction material for these signs shall be on a light weight card board paper stock or as approved by the Associate Engineer - Highways. The temporary no parking signs shall be in accordance with Sign No. P1-2C of Part 221.5; Prohibition signs, of the current Manual of Uniform Traffic Control Devices (MUTCD) and supplements. Placement of signs will be as approved by the County Maintenance Supervisor - Roads on a per street basis.

c. The Contractor must provide a minimum of one flag person at all times. The purpose of this flag person is to maintain directional vehicular and pedestrian traffic. An arrow board shall also be utilized to provide advance warning of lane changes and construction operations in addition to a flag person.

Method of Measurement: The quantity to be paid shall be the actual installed number of gallons of polymer modified crack sealant cement at 60°F. The gallons will be verified by delivery tickers and measurements of asphalt cement volumes in the kettle prior to additions of fibers. No payment will be made for wasted material.

Asphalt Price Adjustments: Asphalt price adjustments will be made according to the provisions provided in the asphalt adjustment appendix.

Basis of Payment: The unit price bid shall be per gallon and include the cost of all maintenance and protection of traffic, labor, equipment and materials necessary to complete the work. Payment will be made under:

Item No.	Item Description	Pay Unit
	D6690 Polymer Modified Crack Seal	Gallons

ITEM _____FIBER REINFORCED ASPHALT CRACK SEALER (PG 64-22)

General: The work shall consist of cleaning and sealing cracks and joints in the existing pavement. All sealant shall be a fiber reinforced asphalt cement. The Contractor shall provide a listing of municipal and/or private projects where installation of asphalt cement sealant has occurred over the last two years. Before beginning the work the Contractor will be required to demonstrate to the satisfaction of the Associate Engineer - Highways, his competence in mixing and applying the fiber reinforced asphalt sealant in accordance with this specification.

Description: The work to be done shall consist of performing all operations and furnishing all labor, equipment and materials for cleaning and sealing miscellaneous cracks and joints in the pavement using asphalt reinforced with polyester fiber. The work shall commence within seven days from receipt of order to seal.

Materials: The material used shall meet the following requirements:

a. Asphalt cement shall be paving grade asphalt with a material designation 702 of the New York State Department of Transportation Specifications with a viscosity grade of PG 64-22.

b. The fibers shall meet the following requirements:

1. Material: Polyester.
2. Length: 1/4" (one quarter inch).
3. Tensile Strength: 75,000 psi $\pm$ 5,000 psi (pounds per square inch).
4. Specific Gravity: 1.32 to 1.40.
5. Melt Temperature: 480 deg F. minimum.
6. Elongation: 45%.

c. The asphalt cement and fiber proportion shall be based on weight. The weight of the polyester fibers added to the asphalt cement shall be a minimum of 5% of the weight of the raw asphalt cement.

d. The fiber reinforced asphalt cement shall be mixed at the temperatures recommended by the fiber manufacturers but shall not exceed 325 deg F.

e. Blotting material shall be Black Beauty manufactured by H.B. Reed & Company, utility grade #1040 or approved equal. If the bidder is proposing an alternate material this must be clearly identified on the proposal page.

CONSTRUCTION DETAILS:

a. Surface Preparation - The Sealant shall be applied only when the joints and cracks and adjacent pavement surfaces are dry and free of dirt, vegetation, loose material, debris and loose sealant. Joints and cracks and adjacent pavement surfaces shall be cleaned by air blasting. Joints and cracks in excess of 1 inch width shall be repaired by the County before application of the sealant.

b. Preparation of Asphalt Fiber Mixture - The sealant shall be mixed in a double jacketed kettle equipped with an agitator and re-circulating pump. The mixing unit shall be capable of maintaining the specified mixing temperature.

c. Equipment - The asphalt kettle shall be a double jacket kettle with asphalt cement heated by transfer oil. The asphalt sealant shall be mixed by full sweep agitation.

d. Application of Sealant - The pavement surface temperature shall be a minimum of **50 degrees F.** during application. The sealant shall be pumped directly into the crack or joint from the mixing unit. The mixing unit shall have a distributor wand with a pancake design, with the applicator specifically designed to apply the sealant under pressure which compresses the sealant onto the pavement surface. The sealant shall overlap the crack at the pavement surface. The finished height of the sealant above the pavement surface shall be 1/8" to 3/16".

e. Blotting Material - Blotting with fine aggregate shall directly follow sealant application if traffic is permitted immediately after crack sealing, within pedestrian areas or if the ambient temperature exceeds 75 degrees F.

f. Demonstration - Before beginning the work the Contractor will be required to demonstrate to the satisfaction of the Associate Engineer - Highways, his competence in mixing and applying the fiber reinforced asphalt sealant in accordance with the specification.

g. The working hours of construction may have to be restricted on arterial functional classification streets. In general, lane reductions may be prohibited during the peak rush traffic hours of 7:00 A.M. to 9:00 A.M. and 4:00 P.M. to 6:00 P.M. Monday through Friday. The Contractor shall exhibit the ability to maintain adequate traffic flows with a minimum of two lanes of traffic (1 lane in either direction) to the satisfaction of the Associate Engineer - Highways.

h. Temporary no parking signs may be necessary to facilitate traffic flows or crack seal curb lanes. The Contractor shall provide these temporary signs. The construction material for these signs shall be on a light weight card board paper stock or as approved by the Associate Engineer - Highways. The temporary no parking signs shall be in accordance with Sign No. P1-2C of Part 221.5; Prohibition signs, of "The New York State Manual of Uniform Traffic Control Devices." Placement of signs will be as approved by the County Maintenance Supervisor - Roads on a per street basis.

i. The Contractor must provide a minimum of one flag person at all times. The purpose of this flag person is to maintain directional vehicular and pedestrian traffic. An arrow board shall also be utilized to provide advance warning of lane changes and construction operations in addition to a flag person.

Qualifications of Bidders:

a. All bidders will be required to have a minimum of 2 years experience installing hot fiber reinforced asphalt sealing similar to those specified in this contract.
b. Within 3 working days of request by the County, the bidder must present evidence of experience as an asphalt sealant contractor for jobs equivalent to those of this contract and possessing financial standing, plant, machinery and equipment adequate to handle this project. The bidder must provide a list of contract work performed within the last 2 years.

Roads To Be Crack Sealed: Roads to be crack sealed will be designated by the Associate Engineer - Highways.

Maintenance and Protection of Traffic: The Contractor shall be responsible for the maintenance and protection of traffic in accordance with the current Manual of Uniform Traffic Control Devices (MUTCD) and supplements.

Method of Measurement: The quantity to be paid for shall be the actual installed number of gallons of asphalt cement at 60 degrees F. used within the fiber reinforced asphalt sealant. The gallons will be verified by asphalt cement delivery tickets and measurements of asphalt cement volumes in the kettle prior to additions of fibers. No payment will be made for wasted material. Expanded volume of the fiber reinforced asphalt sealant due to temperature and addition of fibers will be reduced by corresponding expansion when calculating waste materials.

ASPHALT PRICE ADJUSTMENTS:

Asphalt price adjustments will be made according to the provisions provided in the asphalt adjustment appendix.

Basis of Payment: The unit price bid shall be per gallon and include the cost of all maintenance and protecting traffic, labor, equipment and materials necessary to complete the work. Payment will be made under:

ITEM _____FIBER REINFORCED ASPHALT CRACK SEALER (PG 64-22)

ITEM NO.	ITEM	PAY UNIT
	FIBER REINFORCED ASPHALT CRACK SEALER (PG 64-22)	Gallon

ITEM _____ PAVER RENTAL

DESCRIPTION:

The contractor shall supply on a rental basis a HMA Paver/ finishing machine of approved type to any location within Monroe County. The Paver rental price shall include furnishing and all necessary maintenance, fuel, and all equipment, mobilization and dismantlement. The paver shall be available within 5 days notice from the County. Bituminous material will be hauled to the paver / finishing machine by others.

EQUIPMENT:

1. The Standard Paver equipment shall meet the requirements of the New York State Department of Transportation Standard Specifications, Section 400 latest revision and be in good working condition. The finishing machine shall be designed with standard compaction equipment such as tamping bars and/or pressure screed. The use of electronic screed and leveling devices are required.
2. Sidewalk Paver shall meet the requirements of Monroe County. The equipment shall be able to pave 4' – 7' as requested by the Associate Engineer or his / hers designee.

MAINTENANCE AND PROTECTION OF TRAFFIC:

The agency shall be responsible for the maintenance and protection of traffic in accordance with the current Manual of Uniform Traffic Control Devices (MUTCD) and supplements.

The vendor will be responsible for maintenance and protection of traffic during delivery and pickup of the unit from the project site, in accordance with the current Manual of Uniform Traffic Control Devices (MUTCD) and supplements.

METHOD OF MEASUREMENT:

The quantity to be paid under this item shall be the number of half or full day's rental provided.

BASIS OF PAYMENT:

Payment will be made under:

The unit price will include all costs for equipment associated with use of the machine. Payment will be made for either half day (0 – 4 hours) or a full day rate (> 4 hours).

Item No.	Description	Pay Unit
	Standard Paver Rental – Half Day	Half Day
	Standard Paver Rental – Full Day	Full Day
	Sidewalk Paver Rental – Half Day	Half Day
	Sidewalk Paver Rental – Full Day	Full Day

ITEM _____ PAVER OPERATOR:

DESCRIPTION:

This item will provide a qualified person to operate paver on an hourly basis (both regular time and overtime) if required by the County, regardless of the asphalt quantity. Overtime is defined as the hours worked per day over 8 hours. The paver operator will have all OSHA required clothing and safety equipment.

MATERIAL REQUIREMENT:

None.

METHOD OF MEASUREMENT:

The quantity to be paid shall be the number of straight or overtime hours worked.

BASIS OF PAYMENT:

Payment will be made under:

Item No.	Item Description	Pay Unit
	Paver Operator – Straight Time	Hours
	Paver Operator - Overtime	Hours

ITEM _____ SCREEDMAN:

DESCRIPTION:

This item will provide a qualified person to operate the paver screed on an hourly basis (both regular time and overtime) if required by the County, regardless of the asphalt quantity. Overtime is defined as the hours worked per day over 8 hours. The screed operator will have all OSHA required clothing and safety equipment.

MATERIAL REQUIREMENT:

None.

METHOD OF MEASUREMENT:

The quantity to be paid shall be the number of straight or overtime hours worked.

BASIS OF PAYMENT:

Payment will be made under:

Item No.	Item Description	Pay Unit
	Screedman – Straight Time	Hours
	Screedman - Overtime	Hours

ITEM _____ HEAVY LABORER:

DESCRIPTION:

This item will provide a qualified person for heavy labor on an hourly basis (both regular time and overtime) if required by the County, regardless of the asphalt quantity. Overtime is defined as the hours worked per day over 8 hours. The heavy laborer will have all OSHA required clothing and safety equipment.

MATERIAL REQUIREMENT:

None.

METHOD OF MEASUREMENT:

The quantity to be paid shall be the number of hours of straight or overtime hours worked.

BASIS OF PAYMENT:

Payment will be made under:

Item No.	Item Description	Pay Unit
	Heavy Laborer - Straight Time	Hours
	Heavy Laborer - Overtime	Hours

ITEM _____ ASPHALT ROLLER RENTAL

DESCRIPTION:

The contractor shall supply on a rental basis a 10 or 5 ton dual drum hot HMA Roller to any location within Monroe County. The Roller rental price shall include delivery and furnishing of equipment, all necessary maintenance items, fuel, mobilization and dismantlement. The roller shall be available within 5 days notice from the County. A roller operator shall be provided as an option at an additional cost per hour.

EQUIPMENT:

1. The 10 Ton Steel Vibratory / Static Roller equipment shall meet the requirements of the New York State Department of Transportation Standard Specifications, Section 400 latest revision and be in good working condition.
2. The 5 Ton Steel Vibratory / Static Roller equipment shall meet the requirements of the New York State Department of Transportation Standard Specifications, Section 400 latest revision and be in good working condition.

Water: The authorizing agency shall be responsible for supplying a source of water. The Contractor shall be responsible to provide the labor and equipment to haul and distribute the necessary water to the project site.

OPERATOR:

This item will provide a qualified person to operate the roller on an hourly basis (both regular time and overtime) if required by the County, regardless of the asphalt quantity. Overtime is defined as the hours worked per day over 8 hours. The roller operator will have all OSHA required clothing and safety equipment

METHOD OF MEASUREMENT:

Equipment: The quantity to be paid under this item shall be the number of half or full day's rental provided.

Operator: The quantity to be paid under this item shall be the number of straight time hours and the number of overtime hours worked.

BASIS OF PAYMENT:

Payment will be made under:

Item No.	Description	Pay Unit
	10 Ton Roller Rental – Half Day	Half Day
	10 Ton Roller Rental – Full Day	Full Day
	5 Ton Roller Rental – Half Day	Half Day
	5 Ton Roller Rental – Full Day	Full Day
	Roller Operator – Straight Time	Hours
	Roller Operator - Overtime	Hours

ITEM _____TACK COAT - APPLIED

DESCRIPTION:

Provide bituminous liquid tack coat material and distributor w/operator to apply material in accordance with the manufacturer's and/or owner's recommendations.

MATERIAL REQUIREMENT:

Material shall meet the requirements of the New York State Department of Transportation Standard Specifications, Section 702, latest revision, for bituminous liquid tack coat and rapid breaking tack coat material.

CONSTRUCTION REQUIREMENTS:

The material shall be delivered to the site upon 24 hours notice and applied in accordance with NYSDOT Standard Specifications, Section 407, latest revision.

BASIS OF BID:

The unit price bid shall include all costs to furnish, deliver and install the material at the recommended and/or agreed upon application rates.

The unit bid price shall be the cost per gallon factoring in an established price of $125 / hour for the rental of the bituminous distributor with operator.

METHOD OF MEASUREMENT:

The quantity of material to be paid for shall be measured by the number of gallons used. The number of hours charged for the distributor truck and operator will only be for hours on the project site. **No payment will be made for travel to and from the project site or for mechanical breakdown of the distributor.** The time charged shall be agreed upon for the project at the end of each working period by the project superintendent.

BASIS OF PAYMENT:

Payment will be made under:

Item No.	Item Description	Pay Unit
	Bituminous Liquid Tack Coat	Gallon
	Rapid Breaking Bituminous Liquid Tack Coat	Gallon
	Tack Coat Distributor rental w/operator	Fixed price $125 / hr.

ITEM COLD IN PLACE RECYCLING OF BITUMINOUS PAVEMENTS (TYPE I AND II)

DESCRIPTION

This work, performed by the contractor, shall consist of recycling the existing bituminous pavement using the Type I or Type II process as indicated in the bid item to a specified depth and width in a single pass per lane width. The single pass recycling system shall have the capability to incorporate additional aggregate (if required); excavate existing pavement by cold milling (Type II) or screen and crush the milled pavement to the required gradation (Type I); proportion, mix and compact the Reclaimed Asphalt Pavement (RAP*) with Asphalt Emulsion and place in accordance with the lines, grades and depth established by the contracting Agency. After the existing pavement has been removed, it shall not be returned to grade until it has been completely processed for final placement.

MATERIALS

Materials shall meet the New York State Department of Transportation Standard Specifications, Construction and Materials latest revision

Bituminous material

Asphalt Emulsion shall meet the requirements of the most current version of NYSDOT Section 702, Bituminous Materials. Liquid materials required for remixing with the recycled pavement material shall be medium setting asphalt emulsion grade HFMS-2 or grade CMS-2. The material shall be obtained from a storage facility that has been approved by the NYSDOT materials bureau.

Additives

Additives may be used to improve the quality of the resulting recycled pavement. Rejuvenators may be added to increase the penetration of the existing asphalt cement. Additives may be combined with the asphalt emulsion prior to construction or may be added during construction. HFMS-2 asphalt emulsion with a polymer modification may be substituted for unmodified HFMS-2 asphalt emulsion and payment shall be made at the bid price approved for the project.

Water shall meet the requirements of Section 712-01, Water.

Aggregate (if required) shall meet the requirements of Section 703, Aggregates.

Prior to the mixing and placing operation, the RAP and imported aggregate (if required) shall meet the following gradation:

SIEVE SIZE	% PASSING
1 ½”	100

EQUIPMENT

The equipment shall consist of a self-propelled machine capable of pulverizing in-situ bituminous pavement to a depth shown on the plans, or as directed by the contracting agency, in one pass per lane width. The machine shall have a minimum rotor cutting width of 10 feet, standard automated grade and slope controls, and the capability of maintaining a consistent depth of cut.

For the Type I method the equipment shall include screening and crushing capabilities to ensure all over sized particles and chunks are reduced to a 1 ½” minus gradation prior to mixing with the asphalt emulsion.

The asphalt emulsion stabilizing additive shall be applied through a separate mixing machine capable of blending the sized RAP into a homogeneous mixture. Placement of the blend materials to grade shall be such that segregation is minimized.

The mixing equipment shall have a positive displacement asphalt emulsion pump which shall be interlocked with the dry materials feeding system so that wet and dry components are volumetrically consistent.

The vendor shall supply all compaction equipment. All compaction equipment shall appear on the current NYS Approved List. Compaction equipment shall be pneumatic tire and/or a dual drum, vibratory roller of adequate weight and drum diameter to complete the consolidation of the recycled mat. The roller shall have a pressure water spray system and scrapers to keep the recycled pavement from adhering to the drums.

CONSTRUCTION REQUIREMENTS

The pavement to be recycled shall be excavated by cold milling to the length, width and depth as specified by the contracting agency, processed and placed as per this specification. The cold milling machine shall be capable of cutting to the depth and lane width required and shall be equipped with automatic grade and slope controls.

When required by the Job Mix Formula, additional aggregate shall be imported and placed on the existing pavement prior to the removal of the pavement to be recycled. The imported aggregate shall be incorporated with the recycled asphalt pavement (RAP) by the milling machine as it progresses forward.

Water is required for cooling of the milling machine cutter head and is added to enhance mixing and compaction. Such additional water shall be added at the cutting head prior to the mixing and placing of the processed material.

In the Type I process the excavated RAP and additional aggregate (if any) shall be fed to a screening/crushing plant that will reduce all oversized material to meet the gradation requirement for the project.

Introduction of the asphalt emulsion into the mixing chamber shall be through a positive displacement liquid metering system. The flow of the asphalt emulsion shall be electronically interlocked with the processed recycled material feed so they will start and stop simultaneously.

Placing of the processed recycled material shall be done to the specified lane width and depth in the path removed by the cold milling operation. Placement shall be done after the cold milling, (sizing, if Type I is specified) and mixing are completed with no material being returned to the newly milled surface until final placement can be accomplished. Final placement shall be done with a floating, vibrating screed which can be crowned at the center. The screed shall be capable of placing the recycled material without “scars” or “drags” in the finished mat.

Compaction shall be completed by the contractor upon placement of the recycled mat and be included in the price bid per square yard. A proper rolling sequence will be determined at the time of construction. In general, rolling will begin at the shoulder edge of the new mat and progressively work toward the centerline of the road. On each successive lane, the joint shall be creased with approximately 4-5” of the compactor drum overlapping the new lane of recycled pavement. Upon the creasing of the joint, the compaction shall continue at the edge of the mat opposite the joint and work progressively toward the joint in parallel passes of the compactor.

Traffic shall be maintained in accordance with Sections 619-1 through 619-3 of the NYSDOT Standard Specification and the Manual of Uniform Traffic Control Devices (MUTCD).

The following functions are specific responsibilities of the contracting agency.

1. Purchase, delivery and proper placement of new aggregate to support the mix design.

2. Supply an approved water source where contractor's hauling vehicle can be loaded as required.

3. Supply dump trucks to remove excess RAP from milling machine and/or place RAP by tailgating in front of milling machine to make up for deficiencies in the pavement.

4. Supply all labor and warning devices necessary for control of traffic per the New York State Manual of Uniform Traffic Control Devices.

5. If the contracting agency elects to Fog Seal the recycled pavement, payment shall be made per gallon delivered and applied at sixty degrees Fahrenheit (60°F) using the price bid for the tack coat item contained in the Monroe County Highway Material Bid Group I..

JOB MIX FORMULA

The contractor shall provide the contracting agency a complete Job Mix Formula at least 5 working days before the start of work. The Job Mix Formula shall include detailed construction recommendations. Recommendations shall be based on field cores of the actual pavement to be recycled inclusive of the depth of cut. Cores shall be obtained from alternating lane locations each 1000 feet for the entire length of the project. Laboratory analysis of the pavement cores shall include at least the following:

1. Residual asphalt content by weight percent. (ASTM D 1856)

2. penetration of residual asphalt. @ 77 Degrees F, 100g, 5 sec (ASTM D5).

3. Gradation of aggregate after extraction. (ASTM C 136).

The Job Mix Formula Shall Include:

1. Specifications of aggregate to be added.

2. Amount of aggregate to be added per square yard.

3. Complete and detailed specification of liquid additive.

4. Amount of liquid additive to be added per ton of RAP/aggregate mix.

5. Core Reports

MAINTENANCE AND PROTECTION OF TRAFFIC:

The agency shall be responsible for the maintenance and protection of traffic in accordance with the current Manual of Uniform Traffic Control Devices (MUTCD) and supplements.
The vendor will be responsible for maintenance and protection of traffic during delivery and pickup of the unit from the project site, in accordance with the current Manual of Uniform Traffic Control Devices (MUTCD) and supplements.

METHOD OF MEASUREMENT

The unit price bid for recycling shall be determined by the number of square yards of recycled pavement and for the depth of cut specified and measured at the centerline of the existing bituminous pavement.

Asphalt emulsion delivered and incorporated into the mix shall be measured by the gallon at 60° F.

ASPHALT PRICE ADJUSTMENTS:

Asphalt price adjustments will be made according to the provisions provided in the asphalt adjustment appendix. All asphalt emulsion incorporated in to the project will be eligible for adjustment under the provisions of the asphalt price appendix.

BASIS OF AWARD

The County will award by each individual item as shown in the proposal section.

BASIS OF PAYMENT

The unit price bid per square yard shall include all equipment and labor to operate the recycling train. including the placement and compaction of the recycled material

TYPE I The recycling train will excavate by cold milling the existing pavement, screen and crush the reclaimed material, mix imported aggregate (if any), combine the processed RAP aggregate mixture with the asphalt emulsion and place the mixture to finished grade.

TYPE II The recycling train will excavate by cold milling the existing pavement, crush the reclaimed material, mix imported aggregate (if any), combine the processed RAP aggregate mixture with the asphalt emulsion and place the mixture to finished grade.

The unit price bid per gallon of asphalt emulsion shall include delivery, labor and equipment necessary to incorporate the material in the mix. The quantity specified in the Job Mix Formula is approximate and may be adjusted as required by the contracting agency. Payment for asphalt emulsion material added to the work shall be by the gallon, temperature corrected to 60° F.

The following asphalt emulsions as described in the material section of this specification will be used in either Type I or Type II..

HFMS-2
HFMS-2p
HFMS-2 w/rejuvenator
CMS-2
CMS-2h

The bid price shall include the cost of coring, analysis, reporting and the development and submittal of the Job Mix Formula.

Optional Items;

The contractor shall supply all labor and warning devices necessary for control of traffic. Basis of payment shall be the additional cost per square yard added to the base cost of recycled pavement placed.

ITEM PAVEMENT RECYCLING (CENTRAL PLANT / PUGMILL MIX)

General Description: This work shall consist of recycling of existing bituminous pavements using high float emulsified rejuvenating agent (HFRA) with reclaimed asphalt pavement (RAP). Under this item the contractor will provide all necessary labor and equipment to grind the existing pavement and to load the grindings into County supplied trucks. In addition, the contractor shall provide all equipment and labor required to; recycle the existing bituminous pavement at a central mixing plant location, place the recycled material through as approved paver.

Bituminous Materials: The high float rejuvenating agent HFRA shall meet the requirements of the following material designation shall conform to the following requirements:

Sieve Test, %	0.10 max.
Storage Stability, 1 day	1.0 max.
Stone Coating, shall pass	Note #1 or #2
Distillation Test,	
Residue From Distillation % Min.	65
Oil Distillate	0-5
Test on Residue from Distillation	
Penetration,	77 deg. F,
00 grams, 5 seconds	200+
Float Test @ 140 deg F, Note #3	1.200+
Solubility in Trichloroethylene, %	97.5+
Flash Point, COC, F Min	350
Saturates, % Max.	20

Additional Requirements - To rejuvenate aged asphalt having a penetration between 10-20 to a penetration of 60 or more, the solids from the HFRA shall not exceed 30% by weight of the aged asphalt.

ASTM Tests -

NOTE #1 - ASTM Method D244 except that the mixture of stone and asphalt emulsion shall be capable of being mixed vigorously for 5 minutes, at the end of which period the stone shall be thoroughly and uniformly coated. The mixture shall then be completely immersed in tap water and the water poured off. The stone shall then be not less than 90% coated.

NOTE #2 - ASTM Method D244 except that the mixture of stone and asphalt emulsion shall be mixed vigorously for 5 minutes, then allowed to stand for 3 hours, after which the mixture shall be capable of being mixed an additional 5 minutes. The mixture shall then be rinsed twice with approximately its own volume of tap water without showing appreciable loss in bituminous film. After the second mixing, the aggregate shall be at least 90% coated.

NOTE #3 - Float Test ASTM Method D-139 except that the residue from distillation shall be poured immediately into the float collar at 500 deg. F. and not through a No. 50 sieve; or if the residue had been allowed to cool, it shall again be heated to 500 deg. F. and poured into a collar. The water bath shall be maintained at the specified test temperature $\pm$ 1 deg. F.

c. Composition of Completed Recycled Asphalt Mixture:

TYPE III	
Mixture screen sizes	General Limits % passing
2”	100
1”	90-100
½”	60-90
¼”	38-74
1/8”	25-62
80	4-16
200	2-8
Bituminous Material % of residula bitumin (2)	4.5-7.0

NOTES:

(1) Aggregate percentages are based on total weight of aggregate.

(2) The bitumen content is based on the total weight of the mix, exclusive of water or oil distillate.

TEST ON ABSON RECOVERY OF
COMPLETED RECYCLED ASPHALT MIX

Test	Minimum	Maximum
Penetration, 77 F, 100 g, 5 sec	60	200
Solubility in trichloroethylene, %	99.0	-
Ductility, 60 F, 5 cm/min, cm	40	-
Flash Point, F	350	-
Loss on Heating, %	-	1.5

Aggregate: The mineral aggregate shall conform to the requirements set out in the following reference subsections in the NYSDOT Standard Specifications:

Fine Aggregate 703.01
Coarse Aggregate 703.02

Grinding/ Milling The equipment for grinding and profiling pavement surface shall be a power operated, planing machine or grinder capable of removing, in one pass, a thickness of asphaltic concrete necessary to provide profile, cross slope, and desired texture uniformly across the entire pavement surface up to 7 inches in one pass. Minimum drum cutting width shall be 6 feet 3 inches. The equipment shall be self-propelled with sufficient power, traction, and stability to maintain

accurate depth of cut and slope. The cutting drum shall have bi-directional cutting capability in order to control chunk size meeting the following gradation:

CHUNK SIZE GRADATION

Sieve Size	Percent Passing
3”	100
2”	95-100
#200	0-12

In addition, the machine shall be so designed that the drum is capable of cutting with a zero side clearance on at least one side. The reclaimed material will be discharged to the rear of the machine onto a 24" pick-up conveyor belt. This conveyor will transfer material to a minimum 24" wide truck loading conveyor into County owned trucks.
The loose material resulting from the operation shall remain the property of the County. The grindings will not be stockpiled higher than 10 feet.

The equipment shall be capable of accurately establishing profile grades along each edge of the machine (within ± 1/8") by referencing from the existing pavement by means of a ski or matching shoe or from an independent grade control and shall be controlled by an automatic system for controlling grade elevation and cross slope at a given rate. The machine shall be equipped with means to control dust and other particulate matter created by the cutting action. The speed of the machine shall be variable in order to leave the desired grid pattern surface texture. Determination of the type carbide milling teeth shall be the sole discretion of the using agency if the intended milling is to be used as a serviceable riding texture for an indeterminate time.

The Pavement surface shall be removed to the depth, width, grade and cross section as directed by the Associate Engineer - Highways. The Associate Engineer - Highways may require that the pavement planing operations be referenced from an independent grade control in those areas where he deems this type of control to be appropriate. For this type of operation, the independent grade control shall be established and maintained by the contractor in a manner acceptable to the Associate Engineer - Highways. In the event the entire pavement width along a section of highway has not been planed to a flush surface by the end of a work period, resulting in a vertical or near vertical longitudinal face exceeding 1 1/4" in height, this longitudinal face shall be sloped in a manner acceptable to the Associate Engineer - Highways as not to create a hazard to traffic using the facility during periods when construction is not in progress. Transverse faces that are present at the end of a working period will be tapered in the manner approved by the Associate Engineer - Highways to avoid creating a hazard for traffic.

Mixing: Reference subsection 405-3.02 equipment to be used for mixing. Mixing shall be done with a rotating twin paddle shaft pugmill providing suitable pressure-kneading action in mixing. Mixing by blading, shoveling and/or scooping will not be permitted. The mixer shall be either a continuous traveling type, central continuous or batch type pugmill designed to accurately proportion either by volume or by weight, so that when the aggregate and bituminous materials are incorporated in the mix, a thorough and uniform coating will result. The mixer shall be equipped to mechanically or electrically interlock the bituminous feed with the aggregate feed such that uniformity of the mixture is assured at all times.

The pugmill mixer(central type), shall be provided with weighing, volumetric or other gauging equipment which shall be capable of providing accurate control at all times of the amount of aggregate entering the mixer per time interval. The mixer shall be equipped with a positive displacement

metering system capable of totalizing the quantity of bituminous material applied to the mixing chamber. The aggregate feed system must contain a minimum of 2 compartments or bins; each compartment or bin shall have adjustable feed gates so that the RAP material and virgin aggregate, if needed, can be proportioned at the specified rate. The capacities of the cold feed bins shall be sufficient to maintain a continuous flow of material. Each bin shall have a mechanical device for uniform feed of the aggregate. The mixer shall be approved by the Associate Engineer - Highways or his representative prior to commencing any work.

Paving: Bidder shall bid rental rate for Barber-Greene SB-140 (or equal) equipped with automatic transverse slope and longitudinal grade screed controls which will be used in spreading the RAP. The County will load and haul RAP from mixing site to paver. The County will be responsible for compacting.

County/Town Highway Department Responsibility:

a. Purchase, deliver, stockpile an aggregate, if required.
b. Provide maintenance and protection of traffic.
c. Supply sufficient trucks to haul RAP or recycled material.
d. Furnish suitable stockpile area with adequate room for mixing and stockpiling.
e. Furnish loader and operator to stockpile RAP and charge pugmill mixer during mixing operation.
f. Supply water.
g. Furnish Roller with operator.

Design, Certification, and Demonstrations:

a. Prior to commencing any mixing work, the successful bidder shall sample the recycled asphalt pavement (RAP) to be used on the project. The RAP material shall then be extracted by standard ASTM methods and as a minimum, the following shall be determined:

1. Percent of asphalt residue in RAP.
2. Penetration of aged asphalt in RAP.
3. Sieve analysis of aggregate in RAP.
4. Percent of HFRA needed to be added to bring the aged asphalt in RAP to desired penetration.

b. After analyzing the RAP material, the supplier shall then submit a certified recommended job mix formula to the Associate Engineer - Highways. The recommended job mix should include the following as a minimum:

1. Complete analysis of RAP material.
2. Percent of RAP material to be used.
3. Percent of virgin aggregate and sizes to be added, if any.
4. Combined aggregate gradation.
5. Percent of asphalt residue in finished mix.
6. Percent of HFRA to be added.
7. Type and percentage of standard emulsion to be blended with HFRA, if any.
8. Target or design penetration of finished mix.
9. Test on residue from Abson Recovery of Completed Recycled Asphalt Mix (RAM) as required in Composition of Completed Recycled mixtures section.

Acceptance of the formula by the Associate Engineer - Highways is solely

for the purpose of quality control, and in no way releases the contractor from his responsibilities.

c. Either during or immediately after construction, the contractor shall provide complete certified test analysis of all job mix formula parameters on the completed cold recycled mixture as directed by the Associate Engineer - Highways.

Contractors Qualifications:

a. Contractor shall have access to a complete and permanently operating manufacturing plant with facilities located within a reasonable delivery distance to the job site.

b. Operator of plant facilities shall have a minimum of 2 years experience in the production of the type of material specified to insure proper mixtures and satisfactory service. The vendor at the time of bidding shall own the equipment with which he intends to complete the contract, if so awarded.

c. The Contractor shall be prepared, upon 12 hours prior notice, to load all required high float rejuvenating agent (HFRA) at temperatures requested by the Associate Engineer - Highways for the specific job.

d. The bidder shall own, operate and maintain a working laboratory at his plant. The laboratory shall be equipped with all equipment necessary to perform all specified tests on the HFRA sample and recycled asphalt pavement (RAP) material. The laboratory shall be operated by a full time qualified technician and shall be available for use by any County personnel. In addition, the laboratory shall also include sufficient equipment to test aggregates and mixes required by NYSDOT materials method #5. The County, may at any time, have samples tested by a certified independent testing laboratory.

e. The Contractor will supply with the bid, documentation showing that he has manufactured and supplied any non-NYSDOT specification items on 4 successful projects in the previous 2 years. This documentation will show name, location, and quantities plus date of completion and person to contact for verification. Any bid on non NYSDOT specification items which is not documented as above, will be considered unresponsive to this specification and will be rejected.

MAINTENANCE AND PROTECTION OF TRAFFIC:
The agency shall be responsible for the maintenance and protection of traffic in accordance with the current Manual of Uniform Traffic Control Devices (MUTCD) and supplements.

The vendor will be responsible for maintenance and protection of traffic during delivery and pickup of the unit from the project site, in accordance with the current Manual of Uniform Traffic Control Devices (MUTCD) and supplements.

BASIS OF BID
The price bid per square yard shall include all labor and equipment for cold milling various county highways in accordance with the attached specifications loaded on county trucks.

The price bid per gallon shall include HFRA and a rotating twin shaft central plant pugmill in accordance with the attached specifications supplied with all testing, labor, fuel and necessary supplied. In addition, a price per day is solicited for a bituminous paver for placing the mix. The price bid shall include delivery, two operators, fuel, and all necessary supplies. The paver shall be of the Barber-Greene SB-140 or equal equipped with automatic transverse slope and longitudinal grade screed controls.

ITEM PAVEMENT RECYCLING (CENTRAL PLANT / PUGMILL MIX)

ASPHALT PRICE ADJUSTMENTS:

Asphalt price adjustments will be made according to the provisions provided in the asphalt adjustment appendix for the emulsion incorporated into the mix.

PAYMENT

Payment for work under this item will be as follows

Item No.	ITEM DESCRIPTION	UNIT
	LIQUID BITUMINOUS EMULSION HFRA (w/ pugmill)	Gallon
	PAVEMENT RECYCLING	Square Yard
	Paver rental (COLD MIX/CENTRAL PLANT)	Day

ITEM - FULL DEPTH RECLAMATION PAVEMENT RECYCLING

DESCRIPTION: This work shall consist of pulverizing an existing roadway to a specified length, width and depth, upgrade with virgin aggregate, as required and blending with an additive to produce a recycled in-place stabilized base material.

MATERIALS:

1 The stabilizing additive shall be furnished by the contractor. The additive shall be the type and quantity specified in the Job Mix Formula and will be paid for under a separate pay item.

2 Virgin aggregate for grade or gradation control shall be furnished by the contracting agency and spread to a depth and width as necessary to assure conformity with the Job Mix Formula.

3 Water for dust control or compaction aid shall be furnished by the contracting agency and placed evenly across the surface or the work to assure conformity with the Job Mix Formula.

4 The pulverized aggregate material in the roadway, including virgin aggregate (if any) shall meet the following specification:

SIEVE SIZE	% BY WEIGHT PASSING
3"	100
2"	90-100
1/4"	30-65
#200	0-10

NOTE: The top size of the pulverized material shall not exceed 1/2 the depth of the total recycled base course thickness after final compaction. Resident cobbles and oversize materials in the sub-base beneath the recycled mat are not subject to this requirement.

CONSTRUCTION REQUIREMENTS:

1 The roadway to be recycled shall be pulverized to the length, width and depth as specified by the project engineer. The contractor shall be equipped to verify the actual depth of cut at any point throughout the project.

2 Where Calcium Chloride Solution is the stabilizing additive of choice, the % passing the #200 sieve shall be 10-20% (see Section 411, NYS Standard Specification).

2 When required by the Job Mix Formula, additional aggregate shall be imported and spread over the pavement to be pulverized. This "new" aggregate shall then be combined with the material being recycled with the initial pass of the pulverizing machine.

3 Shaping of the grade for profile may be required during various stages of the construction and shall be provided by the contracting agency under the direction of the project superintendent.

4 Application of the stabilizing material shall be through the computerized liquid metering spray system on the pulverizing machine. The type and amount of stabilizing agent to be added shall be as specified in the Job Mix Formula.

5 Shaping and compacting of the pulverized material throughout all construction phases shall be the responsibility of the contracting agency.

JOB MIX FORMULA:

1 It shall be the responsibility of the contractor to analyze the existing pavement structure. At least five (5) working days prior to the start of work, written construction recommendations, laboratory analysis and Job Mix Formula shall be delivered to the contracting agency for approval.

2 The Job Mix Formula shall be determined from field samples.
Field samples will be obtained from the pavement that is to be recycled and will consider the entire length of the project and depth inclusive of the actual intended cut. The samples shall be submitted to a qualified laboratory for extraction of bituminous materials and analysis.

3 The specifics of the proposed mix design, analysis parameters and the number and location of core samples shall be a joint recommendation of the contractor and the contracting agency.

4 Upon completion of the laboratory evaluation, a Job Mix Formula for the optimum mix design and a contractor's cost estimate for each project will be submitted to the contracting agency for approval.

EQUIPMENT:

1 The contractor shall furnish a self-propelled machine capable of pulverizing, in-place, the existing pavement and mixing any added aggregate to a depth of sixteen (16) inches.

2 The machine shall be equipped with a computerized liquid proportioning system capable of regulating and monitoring the liquid application rate relative to forward speed and shall be able to handle a complete range of liquid additives. The equipment shall be capable of mixing the liquid additives and the pulverized reclaimed pavement into a homogeneous mixture.

3 The cutting drum shall be fully maintained with adequate cutting teeth at all times throughout the work.

3 The contractor shall furnish a qualified operator and will be responsible for all movement of the equipment including trailer moves to and from the work site.

MAINTENANCE AND PROTECTION OF TRAFFIC:

The agency shall be responsible for the maintenance and protection of traffic in accordance with the current Manual of Uniform Traffic Control Devices (MUTCD) and supplements.

The vendor will be responsible for maintenance and protection of traffic during delivery and pickup of the unit from the project site, in accordance with the current Manual of Uniform Traffic Control Devices (MUTCD) and supplements.

METHOD OF MEASUREMENT: The quantity for payment will be measured by the square yard for material pulverized and mixed within the length, width and depth of each project as ordered by the contracting agency. Liquid additives will be measured by the gallon.

BASIS OF PAYMENT: Payment will be based on the square yards of recycling work completed plus the gallons of stabilizing additive included in the work. The unit price per square yard includes the cost of equipment, maintenance, materials and labor necessary to operate the pulverizing equipment, perform the laboratory analysis and to prepare and submit the Job Mix Formula. The unit price for the stabilizing additive includes the cost of the supply and delivery of the stabilizing additive to the pulverizing machine.

ITEM HOT IN PLACE ASPHALT RECYCLING

1.0 DESCRIPTION:

This item shall be part of a multi-step process of asphalt surface rehabilitation that consists of softening the existing flexible pavement with heat and thoroughly stirring spinning or tumbling the mixture, applying an asphalt rejuvenator, milling/remixing, reshaping and compacting the hot in-place recycled surface. Installing a surface treatment or overlay is a separate and/or concurrent function of this work.

2.0 EQUIPMENT REQUIREMENTS:

A. Preheater: The preheating machine shall be one self-contained machine specifically designed to heat the upper layers of the existing asphaltic pavements. The preheating machine shall be a self-propelled and completely self-contained unit capable of operating at speeds from ten (10') feet to twenty-five (25') feet per minute while uniformly heating the existing surface of the asphalt.

The heating unit shall consist of multi-rows of burners of a type specifically designed for and capable of producing 48 million BTUH; LPG will be used for the heating fuel in compliance with the standards of the State's Air Pollution Control Laws. The BTUH production rate is based upon heating twelve (12') feet wide. Burners shall be located on the front of the heater boxes spaced no more than ten (10") inches apart to achieve proper heat penetration at the required temperature while causing no injury due to overheating the asphaltic surface.

The entire burner assembly shall be so designed so that it may be raised or lowered by a single control and capable of articulation. The burner assembly shall be adjustable in width from eight (8') feet to fourteen (14') feet. The entire heating unit shall be enclosed and vented to contain the heat and prevent damage to plant material or any structures along the roadway. Each unit shall be equipped with an on board 500 gallon water system to be used to adequately reduce the temperature of the exhaust in the venting system thereby preventing desiccation of trees and shrubs by evapotranspiration due to high heat. Hand hoses with adjustable nozzles will be placed on each unit to allow for prewetting of specific plants or objects.

B. Heater-Scarifier: The heater-scarifier machine shall be one self-contained machine specifically designed to reprocess upper layers of existing asphalt pavements. The heater-scarifier machine shall be a self-propelled and completely self-contained unit capable of operating at speeds of ten (10') to twenty-five (25') feet per minute while uniformly heating, scarifying, applying rejuvenator, mixing, and screeding the existing pavement to a minimum depth of one (1") to one and one-half (1-1/2") inches at a minimum temperature of 250 degrees Fahrenheit. The wheel base shall not be less than eighteen (18') feet and the total weight shall not be less than 35,000 pounds.

The heating unit shall consist of multi-rows of burners of a type specifically designed for and capable of producing 48 million BTUH; LPG will be used for the heating fuel in compliance with the standards the State's Air Pollution Control Laws. The BTUH production rate is based upon heating twelve (12') feet wide. Burners shall be located on the front of the heater boxes spaced no more than ten (10") inches apart to achieve proper

heat penetration at the required temperature while causing no injury due to overheating the asphaltic surface.

The entire burner assembly shall be so designed so that it may be raised or lowered by a single control and capable of articulation. The burner assembly shall be adjustable in width from eight (8') feet to fourteen (14') feet. The entire heating unit shall be enclosed and vented to contain the heat and prevent damage to plant material or any structures along the roadway.

All equipment shall conform to Federal, State and local DOT and Fire Marshall regulations, and laws relative to the transportation of LPG.

C. Scarifying Unit: The scarifying unit consists of no less than two rows of spring loaded, carbide tip teeth adjustable in width from eight (8') to fourteen (14') feet in increments to one (1") inch and construction in one (1') foot sections to conform to the pavement contour to insure penetration of the teeth and prevent damage to utility structures.

D. Spraying Unit: Immediately behind the teeth of the scarifying unit, an application of a polymer modified rejuvenator shall be applied to the newly remixed area. Nozzle size on the spray bar and pump shall be a combination that will deliver the approved rate of application according to the forward speed of the machine in conjunction with discretion of Highway Superintendent. The tank on the machine shall be heated, and the heating unit on the storage tank for rejuvenator shall be thermostatically controlled to maintain an even specified temperature.

In addition to the above, it will be required that the spraying unit on the machine be equipped with an electronic, digital measuring system (computer) to constantly monitor the quantity of rejuvenating agent being applied. This device will be calibrated to show gallons used to the nearest tenth.

E. Mill/Remixer Unit: Immediately following the application of the recycling agent, a dual-drum enclosed mill shall mill the heated asphalt to the depth of the heat thoroughly mixing the rejuvenating agent with the scarified and milled material. This mill/remixer system shall be an integral part of the scarifying machine and shall be located between the spraying system, which applies the rejuvenator, and the screed. This mill/remixer system shall be fully hydraulically operated and shall be able to work at variable speeds from o to 60 rpm, and shall be retractable from 14.6 ft. to 8.6 ft. wide. This mill shall also be able to break in the center to allow for quarter point and crown control.

No heater scarification can take place without this unit present and in operating condition.

F. Screed and Initial Compaction Unit:

1. Screed: The hot Scarified material shall be uniformly distributed to the desired longitudinal and transverse section by the use of a heated, augured screed. The screed must be equipped with an adjustable crown control, and each end of the screed must have handwheel adjusting screws for providing the desired longitudinal and transverse section.

2. Compaction Unit: Immediate compaction shall take place with rolling equipment of sufficient type and size to compact the recycled bituminous material to the required density. Normally this can be accomplished with the application of an eight (8) to twelve (12) ton vibratory roller. State specifications for bituminous concrete surfaces shall apply.

3.0 CONSTRUCTION REQUIREMENTS:

A. Pavement Preparations: The entire area to be resurfaced shall be cleaned of all deleterious material. If required, the Owner shall broom clean the area prior to commencement of work or specify the contractor to do the same. The Contractor is required to provide traffic control.

B. Heating, Scarifying, Leveling, and Rejuvenating: The existing asphalt material shall be heated, scarified and mixed to a minimum depth of one (1") inch. Under no circumstances shall the scarifying teeth penetrate into the existing base.
The heated polymer modified rejuvenator shall be applied immediately following the scarifying teeth. The polymer modified rejuvenator is specifically formulated for use with the hot in-place recycling, and therefore, shall not be substituted.

The hot scarified material shall then be mill/remixed immediately following the application of the recycling agent to eliminate premature compaction of the hot recycled asphalt resulting in final differential compaction and to the desired longitudinal and transverse section by the use of an attached, heated, augured screed. Directly behind the screed process shall be an 8 to 12 ton roller for compaction

C. Overlay: The application of the final wearing surface consisting of either hot mix asphalt pavements, nova-chip, micro-paving, or chip seals follow after a prescribed interval or delay. These materials are applied with conventional equipment in conformance with standard construction methods. NOTE: Surface treatment not included in unit price (work to be done by others).

At all manholes, valve boxes, etc., the finished grade of the heater-scarifying process shall be transitioned to blend into the existing grade.

4.0 MAINTENANCE AND PROTECTION OF TRAFFIC:

The vendor / contractor shall be responsible for the maintenance and protection of traffic in accordance with the current Manual of Uniform Traffic Control Devices (MUTCD) and supplements.

ITEM HOT IN PLACE ASPHALT RECYCLING

5.0 METHOD OF MEASUREMENT

Asphalt recycling performed and application of rejuvenating agent shall be measured by the square yard.

6.0 BASIS OF PAYMENT:

Prices shall include all labor, equipment, materials, fuels, supplies, rejuvenating agent, mobilization, bond and insurance required to complete the above item. Payment for heating, scarifying, application of rejuvenating agent, milling/remixing, and compaction will be made at the price bid per square yard.

SPECIFICATIONS FOR EMULSIFIED RECYCLING AGENTS

These specifications cover emulsified recycling agents to be used in cold mix recycling or hot in-place recycling. The final acceptance of these materials shall be based on their performance to (a) restore the aged "old" asphalt characteristics to a consistency level appropriate for construction purposes, (b) restore the aged asphalt to its optimal chemical characteristics for durability, (c) provide sufficient additional binder to coat new aggregate that is added to the recycled mixture, and (d) provide sufficient additional binder to satisfy mixture design requirements.

Note: All samples shall be shipped and stored in clean, airtight, sealed wide mouth jars or bottles made of plastic. The specific gravity of the emulsified recycling agent shall be reported for each shipment. The rejuvenating agent for hot in-place asphalt recycling shall be Koch Pavement Solutions product ERA-25P or approved equivalent.

TEST	ASTM METHOD	MIN.	MAX	MIN.	MAX
Viscosity, Saybold Furol @ 25 C, sec.	D244	15	85	15	85
Storage Stability Test, 1 Day	D244	–	1.0	–	1.0
Sieve Test, Retained on No. 20 Sieve Percent	D244	–	0.1	–	0.1
Cement Mixing, Test Percent	D244	–	2.0	–	2.0
Residue by Evaporation Percent	D244	65	–	65	–

Tests on Residue

ITEM HOT IN PLACE ASPHALT RECYCLING

Viscosity @ 60 C cst	D2170	200	800	1000	5000
Torsional Recovery			20	–	
Base Recycling Agent (ie. Prior) to emulsification	D4552	RA-5		RA-25	

ITEM _____STABILIZED SHOULDER MATERIAL

DESCRIPTION:

It shall be the purpose and intent of this award to make available to end users a per gallon price to have a vendor deliver, mix and stockpile a lignosulfate based product suitable for stabilizing aggregate road shoulders.

MATERIAL REQUIREMENT:

The material shall be suitable for stockpile storage and shall consist of the following;

Sodium/calcium chloride	13%
Lignin	19%

EQUIPMENT REQUIREMENT

The price per gallon includes the mixing by the vendor. The vendor shall deliver the necessary pug mill mixing equipment plant to the purchasing agents site, the mixing equipment shall be supplied with adjustable liquid flow controls and a qualified operator trained by the vendor. The pugmill shall be capable of receiving different blends of aggregates to produce a homogeneous blend of aggregates, and liquid as desired by the purchasing agency. The purchasing agency will provide the loader and operators to assist in the mixing process to obtain optimal mixing production.

The agency will provide and or coordinate the location and supply the aggregate to be mixed.

METHOD OF MEASUREMENT:

The quantity of material to be paid for shall be by the gallon.

BASIS OF BID:

The agency requests bids in for each material designated as follows:

The unit price per gallon shall include all costs for the vendor furnishing, delivering the liquid material and mixing (w/portable pugmill) the liquid material with agency supplied aggregate at the agency storage facility.

BASIS OF PAYMENT:

Payment will be made under:

Item No.	Description	Pay Unit
	Stabilized Shoulder Material	Gallon

ITEM _____LIQUID CALCIUM CHLORIDE

DESCRIPTION:

Furnish and apply calcium chloride material for gravel road stabilization to any point in Monroe County F.O.B. within 7 days after order or furnish liquid calcium chloride for snow and ice to agency facility.

MATERIAL REQUIREMENT:

Material shall meet the following requirements:

Specifications	
Calcium Chloride	34% +/- 1%
Alkali Chloride as NaCl	2% max
Magnesium as Mg	0.01% max

Typical Breakdown (#/gal)	
Calcium Chloride	3.8
Sodium Chloride	0.2
Magnesium Chloride	0.004
Calcium Sulfate	0.004
Water	7.162
Total	11.170

METHOD OF MEASUREMENT:

The quantity of material to be paid for shall be measured by the Gallon, with a minimum order of 500 gallons.

BASIS OF BID:

The unit price bid for gravel road stabilization will be F.O.B. to any point in Monroe County including application at the rate designated by the municipality within 7 days after order. The unit price bid shall include all labor, equipment and material as required for the competent application of the mix.

The unit price bid for snow and ice control will be delivered F.O.B. to any point in Monroe County to the municipality within 7 days after order. The unit price bid shall include all labor, equipment and material to deliver material to agency facility.

BASIS OF AWARD:

The award will be to 1 vendor only, based upon the lowest price.

ITEM _____LIQUID CALCIUM CHLORIDE

BASIS OF PAYMENT:

Payment will be made under:

Item No.	Description	Pay Unit
	Liquid Calcium Chloride (Snow & Ice Control)	Gallon
	Liquid Calcium Chloride (Gravel Road Stabilization)	Gallon

ITEM - COLD MILLING OF ASPHALT PAVEMENT AND MIXED COMPOSITIONS :

General : The work specified under this item will involve the milling, shaping and removal of portions of asphalt and mixed compositions by a cold milling process consistent with the provisions of section 490 of the NYSDOT specifications latest revision.

Description: The planed surface shall provide a smooth riding surface free from gouges, continuous grooves, ridges, oil film, and other imperfections of workmanship and shall have a uniform textured appearance.

Materials: All materials shall be in conformance with section 490-2 Materials of the NYSDOT Specification latest revision. In addition the following shall apply;

> **Water:** The authorizing agency shall be responsible for supplying a source of water and the labor and equipment to haul and distribute the necessary water to the project site. In the event that that the authorizing agency cannot supply the water to the project the contractor will be required to supply the water, including labor and equipment; and will be paid at the bid price in the proposal.

Protection: The Contractor shall protect sidewalks, trees, shrubbery, manholes, frames and grates, curbs, valve covers and any other items which may be damaged by his construction procedures and shall be responsible for repair or replacement of said damaged items at no cost to the County. It shall be the Contractor's responsibility to prevent cuttings from entering receiving basins and any cuttings that enter any receiving basin shall be removed at the Contractor's expense.

Construction Methods: The pavement surface shall be removed to the depth, width, grade and cross section as directed by the project engineer. The project engineer may require that the pavement milling operations be referenced from an independent grade control in those areas where he deems this type of control to be appropriate. For this type of operation, the independent grade control shall be established and maintained by the contractor in a manner acceptable to the project engineer and the final position of same shall be acceptable to the project engineer. In the event the entire pavement width along a section of highway has not been planed to a flush surface by the end of a work period, resulting in a vertical or near vertical longitudinal face exceeding 1 1/4" in height, this longitudinal face shall be sloped in a manner acceptable to the project engineer as not to create a hazard to traffic using the facility during periods when construction is not in progress. Transverse faces that are present at the end of a working period will be tapered in a manner approved by the project engineer to avoid creating a hazard for traffic. No loose material will be permitted to remain on the pavement. All milled surfaces shall be thoroughly swept and millings removed.

If the authorizing agency requests a smaller mill head other than the ‘standard’ 4’ then separate payment will be made at the fixed price indicated in the proposal.

Surface Texture: The surface texture produced for a finished pavement shall be a grid surface with uniform discontinuous longitudinal striations or any other pattern that will provide, in the opinion of the project engineer, a satisfactory riding surface with adequate skid resistance. It is the intent that the average texture depth resulting from a number of tests directed by the project engineer be not less than 0.20". Should the texture depth fall below the intended, the finish procedures shall be revised to produce a surface texture acceptable to the project engineer.

ITEM - COLD MILLING OF ASPHALT PAVEMENT AND MIXED COMPOSITIONS :

Maintenance and Protection of Traffic: The Contractor shall be responsible for the maintenance and protection of traffic in accordance with the current Manual of Uniform Traffic Control Devices (MUTCD) and supplements for loading and unloading the equipment and other operations outside of the work zone area.

The agency will provide overall MPOT throughout the work zone, and the contractor shall not begin work until the agency has all MPOT provisions in place.

Unit Price: The option multiplier price bid shall be applied to the scheduled square yard payment item prices contained in the proposal**. Do not show percentages to show the multiplier.** Any bid showing percentages will be rejected. **The multiplier shall be submitted to 4 decimal places.** (example 0.xxxx or 1.xxxx) The prices shall include the cost of milling asphalt; milling mixed compositions; hauling of millings and mixed compositions; disposal of millings and mixed compositions; hand work around structures (chipping); sweeping; providing temporary pavement wedges at the beginning and ends of the milled pavement and around structures; all survey necessary to assure the removal of material to the depth and slope ordered by the project engineer; all labor and equipment and material necessary to complete the work **as detailed in the particular bid option** to the satisfaction of the project engineer.
The multiplier shall not be applied to the additional depth items for any bid option. The prices stated for the additional depth in the proposal are fixed.

A fixed mobilization price of $500 is established for;

- **All small projects under 1000SY in total quantity, or**
- **Moving of the milling machine to another work location requiring the use of a low-boy trailer**

Option Descriptions:

Option A: The Contractor shall provide milling of asphalt. The municipality shall provide chipping, sweeping, haul trucks, disposal site, disposal site loader and operator.

Option B: The Contractor shall provide milling of asphalt, chipping and sweeping. The municipality shall provide haul trucks, disposal site, disposal site loader and operator.

Option C: The Contractor shall provide milling of asphalt, chipping, sweeping and haul trucks. The municipality shall provide the disposal site (within a five mile radius of the milling project), disposal site loader and operator.

Option D: The Contractor shall provide milling of asphalt, chipping, sweeping and haul trucks. The municipality shall provide the disposal site (within a ten mile radius of the milling project), disposal site loader and operator.

Option E: The Contractor shall provide milling of asphalt, chipping, sweeping, haul trucks, disposal site, disposal site loader and operator.

Option F: The Contractor shall provide milling of mixed compositions. The municipality shall provide chipping, sweeping, haul trucks, disposal site, disposal site loader and operator.

ITEM - COLD MILLING OF ASPHALT PAVEMENT AND MIXED COMPOSITIONS :

Option G: The Contractor shall provide milling of mixed compositions and chipping and sweeping. The municipality shall provide haul trucks, disposal site, disposal site loader and operator.

Option H: The Contractor shall provide milling of mixed compositions and haul trucks. The municipality shall provide chipping and sweeping and the disposal site (within a five mile radius of the milling project), disposal site loader and operator.

Option I: The Contractor shall provide milling of mixed compositions and haul trucks. The municipality shall provide any chipping and sweeping and the disposal site (within a ten mile radius of the milling project), disposal site loader and operator

Option J: The Contractor shall provide milling of mixed compositions, haul trucks, disposal site, disposal site loader and operator. The municipality shall provide any chipping or sweeping.

Measurement and basis of payment: Work prescribed by this item will be measured by the square yard of milled surface area. Square yard calculations for determining the range for square yard unit pricing and invoicing will be based on the measurements of the actual contiguous area of milled road (or roads, if the road name changes), including necessary side street approaches and transitions. A physical break in the milling operation to another site via a low boy move or 'walking' the machine to another location a distance of 1000 LF or more will constitute a new project and a new measurement of the square yardage will be begin.

When the authorizing agency requests a smaller mill head other than the 'standard' 4' then a separate payment will be made at the fixed price indicated in the proposal to cover the cost of the change.

When the authorizing agency cannot supply the water needed to the job site, the contactor shall supply the water and the unit bid price for supplying water either by the half day unit (4 hours or less) or the full day rate (greater than 4 hours) shall apply. No additional compensation will be made for overtime. The single bid price for supplying water will apply to all the options awarded to each bidder.

Basis Of Award:

There will be a separate award for each option. Each option will be awarded to the bidder with the lowest multiplier. Bidders shall only submit a single multiplier for each option. Deletion or changes to items listed or scheduled unit prices will be cause for rejection of the bid.
The multiplier will be applied to each of the scheduled square yard ranges/values for the award and contract pricing. The pricing for the additional depth on each option is fixed and the multiplier will not be applied to those items. Supplemental pricing for changing the mill head and supplying water (by the half day or full day) will not be subject to the multiplier and will be awarded to the low bidder for that option

ITEM _____ MOTORIZED SWEEPING: Maintenance Sweeping / Construction Sweeping / Emergency After Hours Sweeping

Description:

The services to be offered by the Contractor shall consist of power sweeping roadways including paved shoulders of those county highways that are designated by the Associate Engineer - Highways. The sweeping shall be classified as one of the three methods described below:
Maintenance Sweeping – Sweeping of a designated area as part of a routine maintenance program.

Construction Sweeping – Sweeping of a road on an active construction project.

Emergency After Hours Sweeping – Dispatched after hours to sweep a particular location on a road. The materials to be swept shall be non- hazardous, non-life threatening debris. The Contractor shall be available between the hours of 4:00 PM to 6:00 AM for emergency work requests seven days a week including holidays. An after hours emergency phone number shall be furnished to Monroe County during the contract period.

Equipment:

The bidder must submit, when requested by the Associate Engineer - Highways, written evidence of the ownership of, at least 1 motorized sweeper meeting the specifications listed below:

a. An efficient water spray system for dust control.

b. A minimum 28" diameter powered right & left hand gutter/curb broom. A minimum 74" wide sweeping path, measured from the outermost edge of the main broom continuously to the left most edge of the main broom or vacuum intake.

c. An efficient and thorough means of dislodging and conveying debris from the road, gutter or shoulder surface into the hopper by means of a vacuum system. Those with a vacuum should be aware that additional passes may be required for complete sweeping.

d. The equipment used shall be properly registered, inspected, operated and insured in accordance with the Motor Vehicle Laws of the State of New York. The equipment shall be equipped with all required lights / flasher and sound alarms required to perform day time and after hours (night time) work. Machines shall be kept in good working order during the term of the contract. The bidder shall be solely responsible for furnishing, storage and maintenance of equipment meeting the specification described herein. This shall include, but not be limited to, the provision of fuel, oil, hydraulic fluids or replacement brooms.

Labor:

The bidder shall be responsible for providing all labor necessary to perform the services described herein. This shall include, but not be limited to, direct sweeping labor, travel time, waiting time, breakdown time and overtime. This should also include provision for competent supervision.

Debris:

The bidder shall be responsible for the proper disposal of all debris collected during the course of the sweeping services. The disposal of all such material shall be in compliance with all rules, regulations and laws effecting the disposal of such material.

ITEM _____ MOTORIZED SWEEPING: Maintenance Sweeping / Construction Sweeping / Emergency After Hours Sweeping

The bidder shall be responsible for the removal of all dirt and assorted debris located within the areas to be swept. This shall include, but not be limited to the removal of mufflers and assorted materials, (not exceeding 35 lbs. in weight), laying within the areas to be swept. This will **NOT** include piles or materials that have been intentionally placed within the areas to be swept.

No spillage will be allowed when a sweeper discharges a load into a transfer truck for disposal. The contractor will be responsible at his own expense; to re-sweep areas were such spillage occurs. No discharge of materials onto the highway for subsequent loading onto a truck for disposal will be allowed.

Highways To Be Swept:

The list of highways to be swept, together with their recorded lengths will be provided by the Associate Engineer - Highways and furnished to the successful bidder. These highways are to be completely swept once within the time limits as specified herein. This list may not be added to without the direct approval of the Associate Engineer - Highways. A complete or partial second round of sweeping may be authorized by the Associate Engineer - Highways. A minimum of 100,000, linear feet of highways will be guaranteed to the contractor for the first round of sweeping.

It shall be the responsibility of the bidder to examine the sites and conditions of the work areas. No claims for additional payment or pleas will be accepted regarding an inability to perform the work if based upon an alleged ignorance of existing or expected conditions, explicitly including the extent and/or type of debris on the highway(s) to be swept.

Time Limit For Start/Completion Of The Work (Maintenance or Construction Sweeping): The successful bidder shall be required to begin work upon 7 days notice by the Associate Engineer – Highways or his/hers designee. The first round of sweeping shall be completed within 30 days of such notice. If a second round of sweeping is ordered this round shall also be completed within 30 days of such notice. Sweeping shall not take place before 6:00 A.M. or after 9:00 P.M.

Time Limit For Start/Completion Of The Work (Emergency After Hours Sweeping):
After Hours shall consist hours from 4:00 PM to 6:00 AM
Sweeping shall commence 1 hour after the initial call dispatched by the Monroe County Stand By Person.

Parked Cars And Hand Sweeping: The successful bidder will **NOT** be required to do any hand sweeping, nor will it be required to return to sweep an area previously obstructed by parked cars under the Maintenance or Construction Sweeping.

Hand Sweeping may be required and the bidder shall be responsible to do as such under the Emergency After Hours Sweeping.

Supervision And Reporting: The contractor shall have a supervisor or foreman available at all times to direct the work. This person shall report to the Associate Engineer - Highways any problems that may occur and shall submit progress reports as follows:

a. Daily, by telephone or e-mail, a list of highways completed the previous day.
b. A list of highways to be completed that day.

ITEM _____ MOTORIZED SWEEPING: Maintenance Sweeping / Construction Sweeping / Emergency After Hours Sweeping

Maintenance And Protection of Traffic: It shall be the sole responsibility of the Contractor to protect traffic and to insure that the sweeper(s) are properly signed and illuminated. The Contractor shall be responsible for the maintenance and protection of traffic in accordance with the current Manual of Uniform Traffic Control Devices (MUTCD) and supplements.

Method Of Measurement:
Maintenance Sweeping: Measurements shall be per 1,000 linear feet of curb, gutter or paved shoulder swept. This measurement shall include all curb lanes, gutters and paved shoulders within the path. The measurement shall also include the sweeping of all radii of intersecting streets/highways. Unless demonstrated otherwise by the Contractor, measurements shall be determined by records maintained by the Associate Engineer - Highways. No added payment will be made for additional passes that may be required to completely sweep the designated areas to the satisfaction of the Associate Engineer - Highways.

Construction Sweeping: Measurement shall be per hour. The contractor shall be responsible to submit a daily sheet showing the start and completion time of the employee. The contractor shall meet with the Associate Engineer – Highways or his/hers designee and submit the daily sheet at the end of each work day.

Basis Of Payment:

Maintenance Sweeping: The bid price shall be in full and sole consideration of all services and work required to completely sweep the designated highways per 1,000 linear feet. This price will be paid regardless of the highway width or the number of passes required for a complete sweeping. Payment will be made after submission of a voucher and a detailed invoice indicating the followings:

a. List of highways swept.
b. Starting and stopping points of sweeping (intersecting street/highway or point).
c. Linear feet of highways swept.
d. Dates and or times of such sweeping.

Construction Sweeping:
The bid price shall be based on a per hour charge. The contractor's time sheet will be used to verify the invoice. Certified payroll shall accompany all invoices for work performed under Construction Sweeping. The contractor's time sheet will be used to verify the invoice. Certified payroll shall accompany all invoice for work performed under Construction Sweeping.

Emergency After Hours Call Out Sweeping: The bid price shall be based on an individual call out on a each individual call to any location within Monroe County.
Payment will be made under:

Item No.	**Description**	**Pay Unit**
	Motorized Maintenance Sweeping (*non-construction)*	1000 LF
	Motorized Construction Sweeping	Per Hour
	Emergency After Hours Call Out Sweeping	Each Location

ITEM_____ CONCRETE GUTTERS VARIOUS OPTIONS

Description: Under this item the Contractor shall supply all labor, equipment and materials that are required to install new concrete gutters and to remove and replace existing gutters as specified in the following options. The work shall commence within 7 days of notification by the project engineer. The Contractor shall guarantee the work as stated in the following specifications.

Materials: The materials and manufacture of concrete for this work shall meet the NYSDOT specifications for Class "D" Concrete specified in Section 501, Portland Cement Concrete - General. The plant and materials shall be New York State approved.

Construction Details: Concrete gutters shall be either conventionally formed or machine formed to the size and shape as specified by the project engineer. The concrete gutters shall be 6" thick constructed in conformance with the Monroe County Department of Transportation Standard Details and NYSDOT specifications Sections, 502-3, 624-3.02 and Class "D" Concrete 501-2. Concrete plant and materials shall be NYSDOT approved. The Contractor shall be responsible for the removal and proper disposal of all debris and excess material.
For options that include the restoration of grass and asphalt pavement areas, the following will apply; a minimum of 3"' of screened topsoil will be installed following by grass seed, and in general the existing asphalt section thickness should be matched in kind up to a maximum section of 6" asphalt base, 2" of asphalt binder and 1.5" of asphalt top in the roadway, and a maximum of 2" of binder and 1.5" of asphalt top for driveway areas.

Guarantee: The Contractor shall guarantee the work under this item for a period of two years. The guarantee period shall commence upon the date of acceptance of the work by the project engineer. The Contractor shall remove and replace any defective work or materials appearing within the guarantee period and shall pay for any and all damages caused by such defective work or materials. The Contractor shall commence the work to remove and replace the defective work or materials within three weeks after the receipt of notification of such defects by the project engineer.

Damages: Gutters that do not require replacement but are damaged by the Contractor during the course of construction shall be replaced at the contractors' expense.

Maintenance and Protection of Traffic: The Contractor shall be responsible for the maintenance and protection of traffic in accordance with the current Manual of Uniform Traffic Control Devices (MUTCD) and supplements.
The Contractor shall notify each property owner in writing 24 hours prior to blocking any driveway access to allow the property owner to find an accessible location to park cars while the property owners' driveway is inaccessible. All gutter work will be scheduled so that no driveway is inaccessible for more than 48 hours.

Method of Measurement: Quantity to be paid will be the number of square yards of exposed surface of concrete gutters placed.

Basis of Bid: The multiplier price bid shall be applied to the scheduled item option prices contained in the proposal**. Do not show percentages as the multiplier.** Any bid showing percentages will be rejected. **The multiplier shall be submitted to 4 decimal places.** (example 0.xxxx or 1.xxxx) The prices shall include all labor, equipment and material necessary to complete the work **as detailed in the particular bid option** as listed below to the satisfaction of the project engineer. Pricing for reconstructing drop inlets will be obtained for work to be done in conjunction with; and adjacent to gutter replacement(s).

Option A - Install New Gutters (All Inclusive): The Contractor shall provide the surveying of line and grade in areas where there are no existing gutters; saw cutting of adjacent roadway and driveway pavement; excavation to the required line and grade; removal and disposal of the excavated material; furnish and place six inches of #2 crusher run stone base to grade; form, pour and protect new concrete gutters; restore adjacent roadway pavement, driveway pavement and lawns.

Option B - Remove and Replace Existing Gutters (All inclusive): The Contractor shall provide the saw cutting of both ends of the existing gutter, roadway pavement and driveway pavement adjacent to the gutter; removal and disposal of the existing concrete gutters; surveying of line and grade; furnish and place crusher run stone base leveling course; form, pour and protect the new concrete gutters; restore adjacent roadway pavement, driveway pavement and lawns.

Option C - Remove and Replace Existing Gutters (Restoration by Others): The Contractor shall provide the saw cutting of both ends of the existing gutter, roadway pavement and driveway pavement adjacent to the gutter; removal and disposal of the existing concrete gutters; surveying of line and grade; furnish and place crusher run stone base leveling course; form, pour and protect the new concrete gutters. The County shall provide the restoration of the adjacent roadway pavement, driveway pavement and lawns.

Option D – Replace (Removal of Existing Gutters and Restoration by Others): The Contractor shall provide the surveying of line and grade; form, pour and protect the new concrete gutters. The County shall provide the saw cutting of both ends of the existing gutter, roadway pavement and driveway pavement adjacent to the gutter; removal and disposal of the existing concrete gutters; furnish and place crusher run stone base leveling course; restoration of the adjacent roadway pavement, driveway pavement and lawns.

Basis of Award:

There will be a separate award for each option. Each option will be awarded to the bidder with the lowest multiplier. Bidders shall only submit a single multiplier for each option. Deletion or changes to items listed or scheduled unit prices will be cause for rejection of the bid. The multiplier will be applied to each of the scheduled values for the award and contract pricing

ITEM – CONCRETE SIDEWALK (VARIOUS OPTIONS)

DESCRIPTION Under this item the contractor shall supply all labor, materials and equipment necessary for the removal and replacement of concrete and asphalt sidewalks, or variations of the item as described in the description of options in this specification.

MATERIALS All materials shall meet the requirements of Sections 608, 701,703,705,709, & 713 of the NYSDOT Standard specification latest revision

Concrete

Concrete shall be Class K, air entrained, and have a minimum compressive strength of 4000 psi. Concrete shall have a design slump of 3", with a maximum deviation of ½". Air content shall be 6%, with a maximum deviation of 2%. Deviations exceeding those specified shall result in rejection of the concrete.

Samples of concrete may be taken during pouring by the County and may be subject to compressive strength tests by an independent laboratory.

Fill Material:

Fill material shall be clean earth, free of topsoil, roots, boulders or construction debris and shall be subject to the approval of the Highway Maintenance Manager.

Expansion Joints:

Shall be premolded bituminous impregnated felt conforming to ASTM Designation D1751.

Maintenance and Protection of Traffic:

The Contractor shall be responsible for the maintenance and protection of traffic in accordance with the current Manual of Uniform Traffic Control Devices (MUTCD) and supplement

METHOD

Excavation:

The contractor shall first make pavement cuts in the driveway along the sidewalk to be replaced at eighteen inches (18") from both edges of the walk. The only exception to this requirement would be when both the gutter and sidewalk will be replaced through a particular driveway. In that case, only one (1) cut, eighteen inches (18") from the edge of walk on the house side of the sidewalk needs to be made.

Pavement cuts shall be made neatly with either a rotary blade or pneumatic spade, and shall be kept as straight and as nearly vertical as possible.

The contractor shall then excavate, remove and dispose of existing marked sidewalk, asphalt, sod and topsoil, to the depths and grades indicated on the plans or as directed by the Highway Maintenance Manager. The contractor shall exercise care when removing marked sidewalk in proximity of sidewalk to remain. The contractor shall saw cut along each abutting concrete sidewalk so as not to disturb existing sidewalk that is to remain. If any damage occurs to remaining abutting sidewalk, the contractor must replace them at no additional cost to the County.

After removal of the old sidewalk, the subgrade shall be trimmed to grade and any roots shall be removed to a depth of six (6) inches or more below the finished subgrade and within six (6) inches of the edge of the new sidewalk. Where roots must be cut, they may be machine ground or cut using machine or hand methods, and shall be left cleanly cut and dressed with a black, asphaltic tree paint, liberally applied.

Preparation of Forms and Subgrade:

After grubbing, the subgrade shall be brought to grade with approved fill material and thoroughly compacted. The finished subgrade shall be smooth and even. Sidewalk blocks shall be constructed using steel forms unless otherwise approved by the Highway Maintenance Manager. Forms shall be set true to line and grade and held rigid throughout construction. After forms have set, align and graded, they shall be checked for alignment and grade. Any corrections required shall be made immediately.

The subgrade shall then be checked in the presence of the Highway Maintenance Manager or his representative with a scratch board supplied by the contractor to assure the required full sidewalk depth and any high spots shall be removed and the subgrade recompacted. No concrete shall be placed until the aforementioned criteria have been satisfied and approved by the Highway Maintenance Manager. The Highway Maintenance Manager shall direct the contractor to remove any undesirable subgrade material. Soft or spongy spots developed during the compaction of the sub-base course shall be removed as per the direction of the Highway Maintenance Manager. In any event, the replacement material used in place of undesirable subgrade material shall conform to that specified in "Fill Material".

Full depth expansion joints shall be formed using premolded bituminous impregnated felt and shall be placed at a maximum of 25-foot intervals, or at street intersections between walks, gutters, curbs, changes in grade or alignment, at the end of every pour, and when abutting existing sidewalks.

Placement of Concrete:

Concrete shall be placed in a uniform and workmanlike manner and progressively in a down-grade direction. Extremely dry subgrade shall be moistened ahead of placement when required.

Concrete sidewalk blocks shall be sixty (60) inches wide, five (5) feet in length and a minimum of five (5) inches deep, unless otherwise directed by the Highway Maintenance Manager.

Concrete shall not be placed during rain nor shall placement be allowed to commence if rain appears imminent. Adequate coverings shall be made available at all times to protect any concrete placed from sudden showers.

The forms shall be filled with concrete and struck off with a screed or strike board with the surface floated with a wood or magnesium float until the concrete is thoroughly compacted and the surface free of depressions and irregularities. No water shall be introduced to the concrete surface to aid in finishing nor shall mixed mortar be used to finish and/or patch surface irregularities. As soon as surface moisture has disappeared, a broom finish shall be applied in a transverse direction and, immediately thereafter, dummy contraction joints scored, expansion joints and sides along forms edged. Sidewalks shall be scored at regular intervals to create reasonably square blocks (i.e. sidewalks 5 feet wide shall be scored to develop blocks which are 5 feet long. Slabs shall be scored using a grooving tool a minimum of 3/4" deep and 3/8" wide. All slabs shall be edged with a ¼" radius steel edging tool.

Detectable warnings

All detectable warnings shall be installed to meet current ADA standards. All detectable warnings shall meet current NYSDOT standards for size and color. A fixed unit price as indicated on the bid price sheets will be used for the areas requiring detectable warnings as authorized by the agency. The detectable warnings installed under this item will be done using the stamping/imprinting method in fresh concrete. If the contractor is required to install them as part of a concrete sidewalk project then the fixed price shall be used. **The fixed price will not be used for installations at individual spot locations**. If the agency desires to install the detectable warning the contractor shall make the necessary provisions for the agency to complete the installation and no payment for detectable warnings will be made. The cost for preparation will be included in the concrete sidewalk item. The completion of the detectable warning installation will be the agencies responsibility..

Concrete Reinforcement:

The agency will determine if steel reinforcement is to be placed in sidewalks. It will be the requesting agencies decision on the use and placement of reinforcing mesh. If requested the fixed unit price for steel reinforcement mesh will be added to the square foot sidewalk price as noted in the proposal. It shall be welded wire fabric, 6"x6", 10-gauge NYSDOT 709-02. At the time concrete is placed, wire reinforcement shall be free from rust scale or other coatings that will destroy or reduce the bond. No wire partially embedded in concrete shall be field bent. Wire reinforcement shall be accurately placed two (2) inches from the bottom and sides of the concrete sidewalk.

It is the contractor's responsibility to order sufficient quantities of concrete to complete the work. No partial blocks shall be placed unless authorized by the Highway Maintenance Manager.

Curing:

After the concrete is finished, it shall be cured for seven (7) days using waterproof blankets or by an approved curing material applied at a minimum rate of one (1) gallon per 12 square yards by an approved mechanical pressure sprayer.

The contractor will remove the forms as soon as the concrete has set sufficiently. Any honeycomb and voids on the sides of the walks shall be immediately patched. After patching is completed the curing compound shall be sprayed on the sides of the concrete sidewalk.

Weather Limitations

Concrete shall not be placed at temperatures below 40 degrees Fahrenheit, or on any subgrade having a ground temperature less than 35 degrees Fahrenheit. At any time during the first five (5) days of curing if the temperature is less than 35 degrees Fahrenheit special weather protection shall be required consisting of a layer of curing paper covered with straw and a second covering to hold the straw in place.

ITEM – CONCRETE SIDEWALK (VARIOUS OPTIONS)

Cleanup:

The site will be cleared of all construction debris including excess earth, paving material and concrete accumulated during the course of construction. Cleanup will be complete prior to the commencement of seeding operations, and will meet the approval of the Highway Maintenance Manager.

FINAL SITE RESTORATION

Lawns:
The contractor shall grade and/or restore disturbed lawn areas within or adjacent to the construction area.

Topsoil shall consist of fertile, natural, agricultural soil, free of weeds, stumps, roots, brush, stone and similar material. Topsoil shall have an acidity between the range of 5.5 pH to 7.6 pH. The organic content shall not be less than 3% and not more than 20%.

Fertilizer shall be 10-10-10, 50% organic.

Grass seed should be the following mixture, or approved equal, in the following proportions:

Morning Star Perennial Ryegrass - 24.28%
Shining Star Perennial Ryegrass - 24.27%
Pennlawn Red Fescue - 24.27%
Kentucky Blue Grass - 21.15%
Inert - 4.83%
Crop - 1.09%
Weed - .11%

Topsoil shall be spread to a 4 inch minimum thickness and shall be gradually tapered to cover disturbed area adjacent to the sides of the sidewalks. Before seeding or fertilizing, the topsoil shall be trimmed and raked. All objectionable material shall be removed and a finely pulverized seed bed shall be formed.

Fertilizer shall be spread over the topsoil at a rate of 10 pounds per 1,000 square feet. Seed shall be spread at a rate of 2 pounds per 1,000 square feet. Both fertilizer and seed shall be spread with a cyclone spreader. The seed shall be covered using a flexible toothed seeder or other suitable equipment by stirring the ground not deeper than ¼". Any areas which fail to show a uniform "catch" shall be reseeded by the contractor at his own expense.

Driveways:

Driveways will be cut eighteen (18) inches from sidewalk edge(s). The contractor will not provide a permanent asphalt repair to driveways under this item unless indicated in the option description. Instead, temporary repairs which will allow vehicular access to affected properties will be done using CR-1 crushed stone brought to the grade of the remaining portion of the driveway, after all loose asphalt pieces have been removed. For options that include the restoration asphalt pavement areas, the following will apply; in general the existing asphalt section thickness should be matched in kind up to a maximum section of 2” of binder and 1.5” of asphalt top for driveway areas.

ITEM – CONCRETE SIDEWALK (VARIOUS OPTIONS)

MEASUREMENT AND PAYMENT

The item will be paid for under the following options as indicated in the option description and detailed within this specification.

Option A - Install New Sidewalks (All Inclusive): The price bid for this item per square yard of concrete sidewalk shall include the cost of surveying line and grade in areas where there are no existing sidewalks; clearing and grubbing (defined as only low growth, tree removals will be performed or coordinated by the agency); saw cutting of adjacent pavement; excavation and/or placement of suitable fill to the required line and grade; removal and disposal of the excavated material; furnishing and placing six inches of #2 crusher run stone base to grade; forming; placement of concrete; finishing; stripping; curing and protection of new concrete sidewalks; cleanup; final site restoration of adjacent pavement and lawns.

Option B Remove and Replace Existing Sidewalks (All inclusive): The price bid for this item per square yard of concrete sidewalk shall include the cost of furnishing all equipment; materials and labor necessary to complete the work including saw cutting of both ends of the existing sidewalk and adjacent pavement; excavation, removal and disposal of existing asphalt or concrete sidewalks; tree root removal; preparing subgrade; furnishing, placing and compaction of subgrade material; forming and placement of concrete; finishing, stripping, curing and protection of new concrete sidewalks; cleanup and final site restoration of adjacent pavement and lawns.

Option C - Remove and Replace Existing Sidewalks (Restoration by Others): The price bid for this item per square yard of concrete sidewalk shall include furnishing all equipment, materials and labor necessary to complete the work including saw cutting of both ends of the existing sidewalk and adjacent pavement; excavation, removal and disposal of the existing concrete or asphalt sidewalk; tree root removal, preparing subgrade; furnishing, placing and compaction of subgrade material; forming and placement of concrete; finishing, stripping, curing, protection of new concrete sidewalks and site clean up. The County or authorizing agency shall provide the restoration of the adjacent pavement and lawns.

Option D – Replace Only (Removal of Existing Sidewalk and Restoration by Others): The price bid for this item per square yard of concrete sidewalk shall include the furnishing and placing any crusher run stone base leveling course; forming, placement of concrete, finishing, stripping, curing, protection of the new concrete sidewalk and site clean up. The County or authorizing agency shall provide the saw cutting of both ends of the existing sidewalk and adjacent pavement; removal and disposal of the existing concrete or asphalt sidewalk; and restoration of the adjacent pavement and lawns.

Basis of Award: There will be a **separate** award for each option. **The total bid price for each option will be based on the single unit price bid for sidewalk replacement by the square yard**. The steel reinforcement and detectable warning options when requested and authorized will be paid at the fixed unit prices as indicated in the proposal.

Method of Measurement

The quantity to be paid for shall be the number of square yards of concrete sidewalk block installed or marked for replacement as directed by the authorizing agency. If steel reinforcing mesh is requested by the agency the fixed unit price for wire reinforcement shall be added to the concrete sidewalk price. If the contractor is requested to install detectable warning at handicap ramps as part of the sidewalk project the contractor will install the detectable warnings using stamped/imprinted methods at the fixed unit price. If the agency desires to install the detectable warnings the contractor shall leave adequate provisions for the agency to install them at a later date. The cost shall be included in the square yard sidewalk item with no separate payment.

ITEM CONCRETE CURB: (**VARIOUS OPTIONS)**

DESCRIPTION

Under this item the contractor shall supply all labor and material required to construct conventionally formed or machine formed concrete curb, type BB. Work will begin within 7 days notice by the Associate Engineer - Highways.

MATERIAL

Conventionally formed or Machine formed curb for this work shall meet the NYSDOT specifications for Class "J" concrete as specified in section 501, Portland Cement Concrete - General.

CONSTRUCTION DETAILS

Conventionally formed or machine formed curbs Type BB, shall have a 7" reveal and comply with NYSDOT specifications as set forth in Section 609-3. The Contractor shall be responsible for the removal of all debris and excess material resulting from the work.

For options that include the restoration of grass and asphalt pavement areas, the following will apply; a minimum of 3"' of screened topsoil will be installed following by grass seed, and in general the existing asphalt section thickness should be matched in kind up to a maximum section of 6" asphalt base, 2" of asphalt binder and 1.5" of asphalt top in the roadway, and a maximum of 2" of binder and 1.5" of asphalt top for driveway areas.

MAINTENANCE AND PROTECTION OF TRAFFIC:

The Contractor shall be responsible for the maintenance and protection of traffic in accordance with the current Manual of Uniform Traffic Control Devices (MUTCD) and supplements.

METHOD OF MEASUREMENT

All curbing placed under this item will be measured for payment on the basis of linear feet along the top arris line of the curb placed.

BASIS OF BID

The item multiplier price bid shall be applied to the scheduled payment item prices contained in the proposal. **Do not show percentages to show the multiplier**. Any bid showing percentages will be rejected. **The multiplier shall be submitted to 4 decimal places.** (example 0.xxxx or 1.xxxx). The prices shall include all labor and equipment and material necessary to complete the work as detailed in the particular bid option as listed below to the satisfaction of the project engineer

Option A (All inclusive) The bid price shall include forming and installing new concrete curbing including traffic control, excavation, subbase preparation, backfill, pavement driveway, lawn restoration and disposal of spoil material.

Option B The bid price shall include forming and installing new concrete curbing including traffic control. The agency authorizing the work will be responsible for the excavation and subbase preparation and all restoration items.

Basis of Award:

There will be a separate award for each option. Each option will be awarded to the bidder with the lowest multiplier. Bidders shall only submit a single multiplier for each option. Deletion or changes to items listed or scheduled unit prices will be cause for rejection of the bid. The multiplier will be applied to each of the scheduled values for the award and contract pricing.

ITEM _____ STONE CURB (VARIOUS OPTIONS)

Description: This work shall consist of the furnishing and installation of stone curbing or reset existing granite or precast concrete curb in accordance with these specifications and the lines and grades shown on the plans or established by the engineer.

Materials: The materials shall meet the requirements of the following subsections of paragraph 700 materials:

Mortar Sand	703-03
Premolded Bituminous Joint Filler	705-07
Mortar for Stone Curbs	705-20
Stone Curb Anchor Bars	709-07
Stone Curb - Type C	714-01
Epoxy Polysulfide Binder	721-02
Class A Concrete Mix	565-0105

Granite Curb
Stone curb shall be granite and meet the material requirements of Section 714 of the NYSDOT Standard specifications latest revision. The stone shall be sound and durable, free from seams which impair its structural integrity and of a smooth splitting and machining character. Natural color variations that are characteristic of the deposit will be permitted. Curb veins shall not exceed one (1) inch (25mm) in width.

Construction Detail Stone Curb: All stone curb used adjacent to flexible type pavement shall be set on continuous concrete backing. Dry concrete mix, Class A shall be used for the portion of such backing below the bottom of the curb. Existing pavement shall be sawcut for the limits of curb replacement a width of 2 feet 0 inches (600mm) from the curb face and removed to subgrade elevation as shown on the attached detail.

All stone curb used adjacent to rigid pavement shall be set on a firm and uniform continuous bed of dry concrete mix. Concrete backing shall be placed behind the curb joints for at least 12 inches (300mm) each side of each joint. Granular material used as a bed shall be properly compacted and carefully shaped to receive the stone curb with a minimal amount of filling in the remaining voids.

All Curb shall be set true to line and grade on a 6 inch dry concrete bedding which shall be placed directly upon a compacted stone subbase of 6 inche deep No. 2 stone. Concrete backing details shall be in accordance with the standard sheet for curb unless other special construction details are called for on the plans or in the proposal. All spaces beneath the curb shall be carefully and thoroughly compacted to provide a firm and uniform bearing.

After the curb has been set, it shall be backfilled with approved material and the material thoroughly tamped before proceeding with any further work in the area adjacent to the curb.

Curb sections shall not be fitted together closer than 1/4 of an inch at the arris line.

ITEM _____ STONE CURB (VARIOUS OPTIONS)

The joints in the curb shall be carefully filled with cement mortar, mixed and rodded in place as indicated in the NYSDOT Standard Specifications, paragraph 705--20, mortar for stone curbs. The top and exposed front face of the joint shall be neatly pointed flush with curb surfaces and satisfactorily cleaned of all excess mortar.

All pavement, driveways and lawns shall be replaced with an 'in kind' section as ordered by the Engineer. If any underdrain is encountered or disturbed during the curb installation, it shall be retained and/or replaced by the Contractor.
The Contractor shall keep the curb clean, aligned and protected from damage until completion of the contract.

Maintenance and Protection of Traffic: The Contractor shall be responsible for the maintenance and protection of traffic in accordance with the current Manual of Uniform Traffic Control Devices (MUTCD) and supplements.

Basis of Bid The multiplier price bid shall be applied to the scheduled item option prices contained in the proposal**. Do not show percentages as the multiplier.** Any bid showing percentages will be rejected. **The multiplier shall be submitted to 4 decimal places.** (example 0.xxxx or 1.xxxx) The prices shall include all labor and equipment and material necessary to complete the work **as detailed in the particular bid option** as listed below to the satisfaction of the project engineer.

Option A (All inclusive) The bid price shall include furnishing and installing new curbing including traffic control, excavation, subbase, drymix bedding, concrete backing, backfill, pavement, driveway, lawn restoration and disposal of spoil material.

Option B The bid price shall include furnishing and installing new curbing all including traffic control, drymix bedding, concrete backing, The agency authorizing the work will be responsible for the excavation and subbase preparation and all restoration items.

Option C The bid price will include resetting of existing curbing including all traffic control, excavation, subbase, drymix bedding, concrete backing, backfill, pavement *(see attached standard sheet)*, driveway, lawn restoration and disposal of spoil material

Option D The bid price will include resetting of existing curbing including all traffic control, drymix bedding, concrete backing. The agency authorizing the work will be responsible for the excavation and subbase preparation and all restoration items.

Option E Under this option the contractor will only be required to furnish Type C Stone curb in the quantities listed in the proposal within 7 working days of notification to the contractor

Basis of Award:

There will be a separate award for each option. Each option will be awarded to the bidder with the lowest multiplier. Bidders shall only submit a single multiplier for each option. Deletion or changes to items listed or scheduled unit prices will be cause for rejection of the bid. The multiplier will be applied to each of the scheduled values for the award and contract pricing.

ITEM _____ RECONSTRUCTION OF EXISTING DROP INLETS

Description:

Under this item the Contractor shall supply all labor and materials required to remove all deteriorated portions of drop inlets and to replace those portions removed with cast in place structural concrete. Work will begin within 7 days of notice by the Associate Engineer - Highways.

Materials:

a. Cast in place concrete shall be Class "A" concrete for structure (555.01) as specified by the NYSDOT Section 555, Structural Concrete and table 501-3, Concrete Mixtures, shall apply. The plant and material shall be New York State approved.

b. All frames and grates required under this item shall be supplied by the County of Monroe.

Construction Details:

No drop inlet will be repaired with less than a 12 inch vertical concrete cap. Construction details shall conform to NYSDOT specification section 604-3. The Contractor shall be responsible for and the removal and proper disposal of all debris and surplus material.

Maintenance and Protection of Traffic:

The Contractor shall be responsible for the maintenance and protection of traffic in accordance with the current Manual of Uniform Traffic Control Devices (MUTCD) and supplements.

Damages:

Gutters that do not require replacement, but are damaged by the Contractor during the course of construction shall be replaced at the Contractor's expense.

Method of Measurement:

All reconstructed drop inlets shall be measured to the nearest vertical tenth of a foot measured from the top of the reset frame.

Basis of Payment:

Payment shall be made per Linear foot of reconstructed drop inlet.

Basis of Bid:
The multiplier price bid shall be applied to the scheduled item prices contained in the proposal**.**
Do not show percentages as the multiplier. Any bid showing percentages will be rejected.
The multiplier shall be submitted to 4 decimal places. (example 0.xxxx or 1.xxxx)

Reconstruction of Existing drop inlets shall be bid per linear foot as follows:
0 to 1Ft. , 0 to 2 Ft. , 0 to 3 Ft. , 0' to 4 Ft. and 0' to over 4 Ft.

ITEM _ - PRETREATING OF SURFACE TREATMENT AGGREGATE
(Pugmill & Liquid Asphalt)

DESCRIPTION:

The work shall consist of pretreating surface treatment aggregate by blending liquid bituminous material with the stockpile aggregate through a twin shaft portable mixing plant.

MATERIAL REQUIREMENT:

Material shall meet the requirements of the New York State Department of Transportation Standard Specifications, Section 700, latest revision. Bituminous material for precoating shall meet the requirements of NYSDOT Section 702-90 Asphalt Emulsion Tackcoat, or Dilute Asphalt Cutback Emulsion or as approved by the agency.

CONSTRUCTION DETAILS:

Weather Limitations: This work will not be permitted when the temperature is below 45 deg. F.

Equipment For Mixing: The contractor will be responsible for delivery, setup and the operation of the portable mixing plant. The agency will provide and or coordinate the location. All the equipment for this work shall be subject to approval of the contracting agency at all times. No work will be permitted until all equipment and the processing facilities are established, inspected and approved.

The agency will be responsible for providing a loader. Mixing shall be done with a rotating twin shaft pugmill, providing suitable pressure-kneading action in mixing. Mixing by blading, shoveling and/or scooping will not be permitted.

The mixer shall be a continuous type pugmill, designed to accurately proportion either by volume or by weight, so that when the granular material and bituminous material are incorporated in the mix, a thorough and uniform blend will result. The pugmill mixer shall be provided with weighing volumetric or other gauging equipment which shall be capable of providing accurate control at all times of the amount of granular material entering the mixer. The mixer shall be equipped to mechanically interlock the bituminous feed with the granular material feed, such that uniformity of the mixture is assured at all times. The mixer shall be equipped with a positive displacement meter for totalizing the quantity of bituminous material applied to the accuracy of the positive displacement meter.

Mixing: The proportion of bituminous material that shall be mixed with the granular material will range between one and two gallons per ton.
After the granular material and bituminous material have been introduced into the pugmill, the mixing shall continue for a length of time necessary to uniformly blend the materials and obtain a homogeneous mixture.

ITEM _ - PRETREATING OF SURFACE TREATMENT AGGREGATE
(Pugmill & Liquid Asphalt)

MAINTENANCE AND PROTECTION OF TRAFFIC:
The agency shall be responsible for the maintenance and protection of traffic in accordance with the current Manual of Uniform Traffic Control Devices (MUTCD) and supplements.

The vendor will be responsible for maintenance and protection of traffic during delivery and pickup of the unit from the project site, in accordance with the current Manual of Uniform Traffic Control Devices (MUTCD) and supplements.

METHOD OF MEASUREMENT:
The quantity of bituminous material to be measured by the Gallon.
The pugmill Rental item to be paid shall be either the number of full day's rental provided or hours.
A fixed mobilization price of $400 is established for each delivery and setup of the mixing equipment.

BASIS OF BID:

The unit price bid per Gallon shall include the cost of furnishing and operating the portable mixing plant, including bituminous material necessary to complete the work. The material shall be available within 5 days notice from the County. Aggregate shall be supplied by the municipality. The asphalt emulsion bid will be adjusted per the term of the asphalt price adjustment appendix.

BASIS OF PAYMENT:

Payment will be made under:

Item No.	Item Description	Pay Unit
	Pretreating Surface Treatment Aggregate DEC 50	Gallon
	Pretreating Surface Treatment Aggregate MC 30	Gallon
	Pugmill Rental – Full Day (8 hrs.)	Full Day
	Pugmill Rental – Hourly	Hour
	Mobilization Fee	$ 400 Fixed

ITEM ____ TREE REMOVAL

Scope of Work:
The Department of Transportation will have an undetermined amount of dead or dangerous trees that will imperil the County Highway System throughout the duration of the contract period which will require trimming and/or removal of the trunk and/or stump on either an **emergency** or **routine** basis. The Contractor shall be available 24 hours a day for emergency work requests. A 24 hour emergency phone number shall be furnished to Monroe County during the contract period.

Priority of Removal:
All work shall be completed within 14 calendar days from notification by the Associate Engineer - Highways, unless otherwise designated as emergency work. As a penalty for failure to meet the required schedule, the Contractor shall forfeit 50% per tree, per day of delay, from the unit price.

All emergency work shall be responded to within 1 hour of notification and be completed within 3 hours of notification, unless the emergency work is delayed due to the presence of downed power lines or overhead utilities. Reimbursement for emergency work will be by way of a sur- charge per tree added to the routine tree removal bid.

D.B.H. Definition:
Diameter of tree trunk at Breast Height, measured at 4 1/2 feet above the ground level. Any discrepancies between the D.B.H. listed on the work lists and actual D.B.H. will be determined by graduated circumferential tape reading in diameter inches.

Damage Responsibility: Under this contract, the Contractor shall be accountable for any and all damage to buildings, walks, driveways, utilities, trees and grounds, and persons which occur while performing the work called for under this contract. The Contractor is responsible to document in advance of performing any work all site conditions which could be later ascribed as damage from the work. Prior notice of any such conditions should be made to the Director of Transportation or his designee and the adjacent property owner. If any damage occurs as a result of this work, the Contractor shall immediately notify the Director of Transportation or his designee. Any adjacent shrubs, trees, or other growth receiving or sustaining breakage, injury or other damage shall be given remedial or corrective treatment and cleaned up.

a. Public Property: The Contractor, at his own expense, shall restore all damaged or injured items to a condition which meets the approval of the General Foreman.
b. Private Property: The Contractor, at his own expense, shall have all damaged or injured items restored to a condition which meets the approval of the property owner.
c. Utility Company Property: In the event of damage to any utility lines, or other equipment belonging to any utility company, the utility company shall make the necessary repairs, and the Contractor shall reimburse the utility company for the cost of these repairs.

Notification:
a. The Contractor shall provide, to Monroe County DOT, a listing of contact persons with pager numbers and phone numbers for contact during emergencies.
b. The Contractor shall endeavor to contact the adjacent property owner giving notice of the work he is going to perform.
c. The Contractor shall notify the Monroe County Department of Transportation, Highway Dispatch at 753-7750, and the resident at least 24 hours prior to performing any work that is scheduled for the next day.

ITEM ____ TREE REMOVAL

Maintenance and Protection of Traffic:

The Contractor shall be responsible for the maintenance and protection of traffic in accordance with the current Manual of Uniform Traffic Control Devices (MUTCD) and supplements.

Tree removal, stump grinding, and trimming operations shall be conducted with a minimum of interference with vehicular traffic, pedestrian traffic and bystanders. Adequate warning signs and devices in accordance with the current Manual of Uniform Traffic Control Devices (MUTCD) and supplements shall be placed to warn all approaching traffic of tree removal operations conducted along streets where traffic impedance is anticipated. The Contractor shall coordinate his work on major traffic arteries with the appropriate Police Department and shall abide by their requirements concerning times of work, warning systems, and movement of equipment.

Wood and Debris Disposal:
All wood and brush is to be removed from the job site by the end of the work day. In the event that equipment problems develop and the wood cannot be removed, the wood must be placed so as not to block any adjacent drive, sidewalk, or highway and shoulder. The job site is to be left broom clean. Any adjacent private property affected by the work is to be similarly cleaned including shrubbery, flower beds, etc.

All wood and chips will become the property of the Contractor and disposed of at his discretion in an authorized area at no additional cost to the County of Monroe. **NOTE**: No wood from any Elm tree or Ash tree is to be sold or given away. Elm and Ash wood is to be disposed of properly by burning or burial.

Utilities: The Contractor shall notify and coordinate his work with appropriate public service concerns when water, gas, electrical, telephone, cable, sewer or other lines and structures may be affected while performing the work called for under this contract. In the event that the Contractor desires a utility line be dropped to facilitate the removal of a tree, the Contractor must contact the appropriate utility company to determine the proper means of notification to request that a line be dropped. In addition, since utility lines are dropped to assist the Contractor in the removal of a tree, it shall be the responsibility of the Contractor to notify any property owner a minimum of forty-eight hours in advance when electrical, cable T.V., or telephone service is to be interrupted.

The Contractor is responsible for contacting and coordinating work with the proper utility to remove any electrical or underground hazard. The presence of such hazard shall not excuse the Contractor from performing any work otherwise required.

The Contractor shall not remove any tree which has attendant guy wires for support of utility systems, etc., unless the utility has been notified of this intent and was given reasonable time to respond.

Safety Standards of Performance: All work is to be performed in compliance with A.N.S.I. Standard Z.133.1 - "Safety Requirements for Tree Pruning, Trimming, Repairing, or Removal."

Qualifications For Bidding: In accordance with Section 103-d of the General Municipal Law of the State of New York, a non-collusion statement is requested to be submitted with the bid.

The bidder must have at least two (2) aerial lift or bucket trucks with insulated upper and lower booms that extend to a working distance of at least 55 feet, and must comply with New York State Department of Labor, Industrial Code Rule #3, with current certificates for a dielectric testing, and also must comply with the U.S. Department of Labor
O.S.H.A. Standards (ANSI A92.2).

ITEM ____ TREE REMOVAL

A listing of the last three (3) years of experience with other municipalities or counties; listing the name and addresses of the responsible person, and the amount of the bid.

The contractor shall provide a qualified and experienced arborist to survey all trees along County road sides on behalf of the County. This survey shall be completed prior to the start of removal work and shall include hazard reduction. A County representative shall accompany the arborist during all survey activities. The arborist shall also be available to meet with property owners if necessary to discuss the need for the recommended work. The arborist shall have sufficient experience with municipal work. The arborist's name, qualifications and experience shall be included with the bid. The cost of the arborist's services shall be included in the unit price bid. Arborist must either be certified according to standards set up by the International Society of Arboriculture or be a member of the American Society of Consulting Arborists.

Work Sites: Trees and stumps for removal will be located primarily along County highway Right of Way.

Tree and Stump Locations and Identification:

a. The agency shall designate which trees or stumps are to be removed.

b. If at any time uncertainty exists about which tree or stump is to be removed or trimmed the Contractor should get confirmation before beginning work at that site. The Contractor will not be paid for any work involved with removal or trimming of an incorrect tree or stump.

Schedule of Performance: Work shall be scheduled and conducted in a cooperative manner in order to cause the least possible interference with or annoyance to others. It shall be the Contractor's responsibility to work out any, if necessary, cooperative work schedule.

BASIS OF BID The option multiplier price bid shall be applied to the scheduled payment item prices contained in the proposal**. Do not show percentages to show the multiplier.** Any bid showing percentages will be rejected. **The multiplier shall be submitted to 4 decimal places.** (example 0.xxxx or 1.xxxx). The price bid shall also include the clean-up of debris from adjoining lawns, walks and streets which was caused by the removal of the trees and limbs involved in this contract.

Billings: The Contractor shall submit a bill for payment, listing the location, species size and date removed for all trees included on the list for which he is requesting payment.

Payment: Payment will be made for each tree at the unit price bid for each item size classification. Those trees that have a "multiple leader" that is, a tree that has more than 1 distinct trunk at 4 1/2 feet above grade (i.e. D.B.H.) will be considered as separate stems for tree removal billing purposes and payment made as determined by the D.B.H. of each stem.

ITEM _____TREE TRIMMING

Scope of Work: The work covered under this item consists of furnishing all labor, material and equipment necessary to complete the removal of dead, diseased, weakened, dangerous, conflicting and extraneous branches from trees designated by the Director of Transportation or designee on highway Right of Way. Work included under this section:

a. Tree Trimming
b. Disposal
c. Clean-up

Workmanship: Contractor shall furnish all equipment and competent personnel with complete and adequate supervision at all times to perform this work in an efficient and professional manner. The work outlined shall be performed using current standards for tree pruning.

Branch Cutting: All cuts are to be made sufficiently close to the trunk or parent limb, without cutting into the shoulder wood or leaving a protruding stub, so that closure can readily start under normal conditions. Clean cuts are to be made at all times.

a. Branches too heavy to handle to prevent splitting or peeling of bark must be precut. Where necessary, to prevent tree or property damage, branches are to be lowered to the ground by proper ropes or equipment.

b. When pruning out dead branch stubs from previous utility line trimming work, be careful not to cut into established callus growth at the base of the stub.

Clean-up: All wood, brush and debris generated from the trimming operation shall be removed from the work site upon completion of the work. The entire area shall be left in a neat and sightly condition to the satisfaction of the Director of Transportation or designee.

Maintenance and Protection of Traffic: The Contractor shall be responsible for the maintenance and protection of traffic in accordance with the current Manual of Uniform Traffic Control Devices (MUTCD) and supplements.

Price Bid: The option multiplier price bid shall be applied to the scheduled payment item prices contained in the proposal**. Do not show percentages to show the multiplier.** Any bid showing percentages will be rejected. **The multiplier shall be submitted to 4 decimal places.** (example 0.xxxx or 1.xxxx). The price bid per tree shall include the tree trimming and disposal of brush and debris.

ITEM _____ STUMP REMOVAL

Scope of Work: The work included under this section consists of furnishing all labor, material, and equipment necessary to complete the removal and disposal of designated highway tree stumps. Work included under this section:

a. Stump Grinding
b. Clean-up
c. Topsoil and Seeding

Stump removal shall be performed within 14 calendar days of notification by Monroe County, or within 14 calendar days of the tree removal. Exceptions to this can be obtained from the Director of Transportation or his designee.

Workmanship: Contractor shall furnish all labor, material, and equipment with adequate supervision at all times to perform the work in an efficient and workmanlike manner.

Stumps: All designated tree stumps will be mechanically ground to a depth 6 inches below existing grade adjacent to stump location. The chips shall be removed. All exposed above grade root collars shall be considered a part of the tree stump and shall be ground in the same manner to a depth of 6 inches below existing grade. The Contractor shall be required to grind exposed surface roots which interfere with turf maintenance.

Job Site Protection: Job site protection for the public is critical during this operation. The Contractor shall provide necessary pedestrian and traffic warning devices. No open excavation may be left unattended at any time.

Clean-up: All stones, excess chips, debris, tools, equipment, etc. are to be removed from the work site the same day that the stump is ground and disposed of at the Contractor's expense upon completion of work. The entire area will be left in a neat and sightly condition, to the approval of the Director of Transportation or his designee.

Topsoil and Seeding: All loose wood chips and soil from the removal of the stump shall be completely excavated, removed, and the holes filled with soil equal to or better than that in the adjacent areas. No brush, chips, stumps, etc., shall be used to fill the holes. Weed free topsoil shall be all fine graded and tamped allowing for settlement to grade.

Grass seed shall be planted as soon as possible after the soil has been applied. The grass seed shall contain: 50% Pennfine Perennial Ryegrass, 25% Pennlawn Red Fescue, 15% Kentucky Bluegrass and 10% Creeping Fescue. The Contractor is expected to make reapplication as necessary until such time as a dense weed free stand of grass is evident.

Maintenance and Protection of Traffic: The Contractor shall be responsible for the maintenance and protection of traffic in accordance with the current Manual of Uniform Traffic Control Devices (MUTCD) and supplements.

Basis of Bid The option multiplier price bid shall be applied to the scheduled payment item prices contained in the proposal**. Do not show percentages to show the multiplier.** Any bid showing percentages will be rejected. **The multiplier shall be submitted to 4 decimal places.** (example 0.xxxx or 1.xxxx). The unit price bid per unit shall include the stump grinding, clean-up, and the topsoil and seeding of the designated area. The price bid shall also include the clean-up of debris from adjoining lawns, walks and streets which was caused by the removal of the stump involved in this contract.

ITEM ____SLICE SEEDING

General Scope: The Contractor shall furnish all necessary labor, equipment and materials for Slice Seeding including application of fertilizer and seed. Work shall commence within 7 days from receipt of order.

Materials: All materials shall meet the requirements of Section 610 of the NYSDOT Standard specification latest revision.

Seed shall be of the latest season's crop, delivered in unopened bags or containers, showing weight, analysis, name of vendor and last germination test.

Grass Area Mixture

50% Pennfine Perennial Ryegrass; 25% Pennlawn Red Fescue; 15% Kentucky Bluegrass; and 10% Crep. Fescue; at a rate of 4 lbs / 1000 Square Feet (SF)

Equipment: The equipment shall be a walk behind slice seeding / overseeding machine. The vertical blades should have the ability to penetrate a minimum of ½" into the exposed soil.

OPTION 1: **Watering of Slit Seeded Areas** - The Slit Seeded areas shall be watered at least once daily at a rate of one-half inch of water per day. Payment shall be made for the total number of gallons of water used multiplied by the bid price per gallon of water.

OPTION 2: **Core Aerate** – Core aerate turf area using a walk behind aerator. The cores shall be a minimum of 1" in depth. Payment shall be made for the total number of Square Feet (Ft) aerated.

Acceptance: Upon notice from Associate Engineer - Highways the Contractor shall return **within 3 days** to perform any necessary re-seeding operations. Upon inspection and approval by the Associate Engineer - Highways (or designee) (minimum 3-4 weeks after completion) the contractor may submit his voucher for payment. Payment will be made per square foot for accepted work.

Maintenance and Protection of Traffic:

The agency shall be responsible for the maintenance and protection of traffic in accordance with the current Manual of Uniform Traffic Control Devices (MUTCD) and supplements.

The vendor will be responsible for maintenance and protection of traffic during delivery and pickup of the equipment from the project site, in accordance with the current Manual of Uniform Traffic Control Devices (MUTCD) and supplements.

Basis of Award: The award will be based on the lowest unit price for the Slice Seeding. The bid price for the options will awarded to the awarded bidder.

Basis of Payment: Bid price shall include all costs of supplying labor, equipment and materials for application of described Slit Seeding per applied square foot

BASIS OF PAYMENT:

Payment will be made under:

Item No.	Description	Pay Unit
	Slice Seeding	Square Foot (SF)
	Option 1: Watering	Gallons (Gal.)
	Option 2: Core Aerate	Square Foot (SF)

ITEM ____HYDROSEEDING OF ROADSIDE AREA:

General Scope: The Contractor shall furnish all necessary labor, equipment and materials for hydroseeding including application of fertilizer, seed, lime mulch and water to roadside areas and commence work within 7 days from receipt of order.

Materials: All materials shall meet the requirements of Section 610 of the NYSDOT Standard specification latest revision.

Seed shall be of the latest season's crop, delivered in unopened bags or containers, showing weight, analysis, name of vendor and last germination test.

Grass Area Mixture (Option A)

50% Pennfine Perennial Ryegrass; 25% Pennlawn Red Fescue; 15% Kentucky Bluegrass; and 10% Crep. Fescue; at a rate of 200 lbs./Acre.

Non-grass Area Mixtures

(Option B) **Reclamation Mix** - 50% Penngift Crownvetch* and 50% Pennfine Perennial Ryegrass at a rate of 80 lbs./Acre. Add to above Select Empire Birdsfoot Trefoil** at a rate of 5 lbs./Acre and Weeping Love Grass at a rate of 1 lb./Acre.
* 10 times Inoculant - Keep in cool area.
** Add Birdsfoot Trefoil Inoculant.

(Option C) **Revitalization Mix** - Penngift Crownvetch* at a rate of 40 lbs./Acre. Add to above Select Empire Birdsfoot Trefoil** at a rate of 5 lbs./Acre and Weeping Love Grass at a rate of 1 lb./Acre.
* 10 times Inoculant - Keep in cool area.
** Add Birdsfoot Trefoil Inoculant.

(Option D). **Watering of Hydroseeded Areas** - The hydroseeded areas shall be watered at least once daily at a rate of one-half inch of water per day. Payment shall be made for the total number of gallons of water used multiplied by the bid price per gallon of water.

Construction details

Fertilizer, application rates, and mulch shall meet the requirements of section 610 of the NYSDOT specification latest revision.

.

Seed Bed Preparation: Unless specifically required to grade, the seeding contractor shall hydroseed as he finds it.

Acceptance: Upon notice from Associate Engineer - Highways the Contractor shall return **within 3 days** to perform any necessary re-seeding operations. Upon inspection and approval by the Associate Engineer - Highways (or designee) (minimum 3-4 weeks after completion) the contractor may submit his voucher for payment. Payment will be made per square foot for accepted work.

Basis of Bid The option multiplier price bid shall be applied to the scheduled payment item prices contained in the proposal**. Do not show percentages to show the multiplier.** Any bid showing percentages will be rejected. **The multiplier shall be submitted to 4 decimal places.** (example 0.xxxx or 1.xxxx). The multiplier bid will be applied to all items in each Square Yard (SY) range.

Basis of Payment: Bid price shall include all costs of supplying labor, equipment and materials for application of described hydroseeding per applied square foot. See proposal sheets for square yardage ranges.

ITEM _____ TREE AND SHRUB (FURNISH / FURNISH AND PLANT)

General Scope: The Contractor shall provide unit prices for furnishing and delivering the specified trees and shrubs to project sites within Monroe County. The Contractor shall also provide unit prices for furnishing, delivering and planting the specified trees on project sites within Monroe County.

Materials: All materials shall meet the requirements of Section 611 of the NYSDOT Standard Specification latest revision.

The following Deciduous Trees shall be 2”- 2.5” DBH with a 24” diameter root ball:

Norway Maple (Acer platanoides)
Red Maple (Acer rubum)
Northern Red Oak (Quercus rubra)
Pin Oak (Quercus palustris)
Thornless Cockspur Hawthorn (Crataegus crus-galli inermis)
Washington Hawthorn (Crataegus phaenopyrum)

The following Coniferous Trees shall be 5’- 6’ tall with a 24” diameter root ball:

Colorado Blue Spruce (Picea pungens glauca)
Australian Pine (Pinus nigra)

The following Evergreen Shrubs shall be as specified below:

Dense Spreading Yew (Taxus densiformis) shall be 18”- 24” tall with an 18” root ball
Dark American Arborvitie (Thuja occidentalis nigra) shall be 5’- 6’ tall with 18”-24” root ball

Basis of Payment

The unit bid price shall include all of the labor, equipment and materials required under each of the following options. The Items under Option A and Option B shall not require a guarantee. The Items under Option C shall be guaranteed for a period of one year from the time of planting.

ITEM	UNIT
Norway Maple	Each
Red Maple	Each
Northern Red Oak	Each
Pin Oak	Each
Thornless Cockspur Hawthorn	Each
Washington Hawthorn	Each
Colorado Blue Spruce	Each
Australian Pine	Each
Dense Spreading Yew	Each
Dark American Arborvitae	Each

ITEM _____ TREE AND SHRUB (FURNISH / FURNISH AND PLANT)

Option A: Furnish and deliver the specified trees and shrubs to project sites within Monroe County.

Option B: Furnish, deliver and plant the specified trees and shrubs without a guarantee. Including plant materials; excavation; soil preparation and conditioning; staking and mulching.

Option C: Furnish, deliver and plant the specified trees and shrubs with a one-year guarantee. Including plant materials; excavation; soil preparation and conditioning; staking and mulching.

Basis of Award: There will be a separate award for each option. The total bid price for each option will be the sum of the unit prices for each item under that specific option.

ITEM ____SOIL CUTTING AND REMOVAL RENTAL:

General Scope:

The Contractor shall furnish the equipment and operator suitable for vertical cutting (soil/unwanted grass and weeds) removal along roadsides, field areas (sport fields) or any other area as directed by the agency. The agency will support the operation with traffic maintenance, trucks, sweepers, and manpower. The contractor shall commence work within 5 days from receipt of order.

Equipment

The equipment shall have the capability of vertically cutting and removing various soil or unwanted grass and weeds from ½" min. to 6" max. depth at a minimum width of 48". The equipment shall be equipped with a side elevator/conveyor which is able to be raised or lowered and folded flat for transportation. The unit must be able to discharge / convey the cut material into a front end loader or trailer or truck. The agency will be responsible for the disposal of excavated material.

Maintenance and Protection of Traffic:

The agency shall be responsible for the maintenance and protection of traffic in accordance with the current Manual of Uniform Traffic Control Devices (MUTCD) and supplements and will provide overall MPOT throughout the work zone. The contractor shall not begin work until the agency has all MPOT provisions in place.

Method of measurement:

The unit price will include all costs for equipment and labor associated with the delivery and use of the machine. Payment will be made for either half day (0 – 4 hours) or a full day rate (> 4 hours).
A fixed mobilization price of $150 is established for all projects.

Basis of Payment:

Payment will be made under:

Item No.	Description	Pay Unit
	Soil Cutting and Removal Rental – Half Day	Half Day
	Soil Cutting and Removal Rental – Full Day	Full Day
	Mobilization Cost	$150

ITEM ____STORM SEWER CLEANING AND TELEVISING

General Scope:

The Contractor shall furnish all the equipment and operator(s) needed for cleaning and / or televising of the storm sewer system. The contractor shall commence work within 5 days from receipt of order.

Equipment

SEWER CLEANING EQUIPMENT

A. Cleaning equipment shall be combination water jet/vacuum truck mounted unit having following capabilities:

1. Water jet performance; minimum of 60 gpm at 2,000 psi.
2. Equip unit with minimum of 500' of 1" internal diameter sewer cleaning hose.
3. Nozzles used in cleaning process and root trimming to be proper choice for cleaning application, including rotating nozzles.
4. Use hand held control gun to thoroughly clean manholes from grade level.
5. Minimum vacuum performance: 3,600 cfm, 15-inch Hg vacuum pressure and 10 CY debris tank.

B. The contractor shall properly dispose of all debris at no additional cost to the agency. Documentation of the disposal site shall be made available to the agency at their request.

Water: The authorizing agency shall be responsible for supplying a source of water. The Contractor shall be responsible to provide the labor and equipment to haul and distribute the necessary water to the project site.

In the event that the cleaning equipment (hose / cleaning nozzle / root trimming cutters) becomes damaged or stuck within the sewer pipe, it shall be the responsibility of the contractor to remove and perform all necessary repairs to the storm sewer / the asphalt pavement / gutter section / curb section as required freeing their equipment at no additional cost to the agency. The repairs must be made to the satisfaction of the agency.

SEWER TELEVISING EQUIPMENT

A. Video camera:

1. Pan and tilt capabilities.
2. High resolution color with adjustable iris focus.
3. Minimum 1,000' camera cable.
4. Operative in 100% humidity conditions.
5. Proper illumination to provide clear video image of entire periphery of pipe.

B. Camera, television monitor and other components of video system to be capable of producing high quality picture and video to satisfaction of Monroe County; if Monroe County determines video quality is unsatisfactory, re-televise sewer at no cost to Monroe County.

C. Footage distance measured by video system to be accurate within 1% and can be checked by Monroe County; structure centerlines shall be reference points to determine footage measurements for reporting and payment purposes.

D. Equip video inspection system with audio capabilities; explain any delays or change in televising process during course of inspection with audio notes on DVD recording. The DVD will become the property of the agency.

In the event that the televising equipment (camera / hose) becomes damaged or stuck within the sewer pipe, it shall be the responsibility of the contractor to remove and perform all necessary repairs to the storm sewer / the asphalt pavement / gutter section / curb section as required freeing their equipment at no additional cost to the agency. The repairs must be made to the satisfaction of the agency.

Maintenance and Protection of Traffic:

The Contractor shall be responsible for the maintenance and protection of traffic in accordance with the current Manual of Uniform Traffic Control Devices (MUTCD) and supplements.

a. The working hours of construction may have to be restricted on arterial functional classification streets. In general, lane reduction may be prohibited during the peak rush traffic hours of 7:00 AM to 9:00 AM and 4:00 PM to 6:00 PM Monday through Friday. The Contractor shall exhibit the ability to maintain adequate traffic flows to the satisfaction of the Associate Engineer - Highways.

b. Temporary no parking signs may be necessary to facilitate traffic flows or crack seal curb lanes. The Contractor shall provide these temporary signs. The construction material for these signs shall be on a light weight card board paper stock or as approved by the Associate Engineer - Highways. The temporary no parking signs shall be in accordance with Sign No. P1-2C of Part 221.5; Prohibition signs, of the current Manual of Uniform Traffic Control Devices (MUTCD) and supplements. Placement of signs will be as approved by the County Maintenance Supervisor - Roads on a per street basis.

Method of Measurement:

The unit price will include all costs for equipment and labor associated with the delivery and use of the sewer cleaning and television equipment.

The Storm Sewer Cleaning and Flushing shall be categorized by pipe size and percent (%) of pipe blocked by debris. A field meeting shall be held were as the agency and contractor will agree to the percentage category as stated below prior to any work commencing.

Category Light (L) is defined as <25% blockage / debris
Category Medium (M) is defined as 25% - 50% blockage / debris
Category Heavy (H) is defined as > 50% blockage / debris

ITEM ____STORM SEWER CLEANING AND TELEVISING

An EMERGENCY AFTER HOURS SURCHARGE (lump Sum) Amount will be added to the unit price for any storm water cleaning / flushing worked required other than scheduled work within 5 days from receipt of order.

Storm Sewer Televising and recording shall be charged at a unit price per foot.

Basis of Award:

A single vendor will be awarded to each individual pipe size for Storm Sewer Cleaning /Flushing and Televising. The award will be based on the sum of each category for the Light, Medium, High Storm Sewer Cleaning / Flushing and Televising.

Basis of Payment:

Payment will be made under:

Description	**Category**			**Pay Unit**
Storm Sewer Cleaning / Flushing 8” Dia.	L	M	H	Foot
Storm Sewer Cleaning / Flushing 12” Dia.	L	M	H	Foot
Storm Sewer Cleaning / Flushing 15” Dia.	L	M	H	Foot
Storm Sewer Cleaning / Flushing 18” Dia.	L	M	H	Foot
Storm Sewer Cleaning / Flushing 24” Dia.	L	M	H	Foot
Storm Sewer Cleaning / Flushing 30” Dia.	L	M	H	Foot
Storm Sewer Cleaning / Flushing 36” Dia.	L	M	H	Foot
Storm Sewer Cleaning / Flushing 42” Dia.	L	M	H	Foot
Storm Sewer Cleaning / Flushing 48” Dia.	L	M	H	Foot
EMERGENCY AFTER HOURS SURCHARGE Amount to be added to the unit price above				LS
Storm Sewer Televising and Recording 8” Dia.				Foot
Storm Sewer Televising and Recording 12” Dia.				Foot
Storm Sewer Televising and Recording 15” Dia.				Foot
Storm Sewer Televising and Recording 24” Dia.				Foot
Storm Sewer Televising and Recording 30” Dia.				Foot
Storm Sewer Televising and Recording 36” Dia.				Foot
Storm Sewer Televising and Recording 42” Dia.				Foot
Storm Sewer Televising and Recording 48” Dia.				Foot

.

Item__ Concrete Pump Rental

DESCRIPTION: The Contractor shall furnish, deliver and operate either a truck mounted or portable, towable, concrete trailer pump for any concrete pumping application as directed by Monroe County. The work may include pumping of concrete, shotcrete, grout, mortar, foamed concrete or flowable fill.

MATERIALS: The concrete materials to be pumped will be purchased and coordinated by the agency authorizing the work.

EQUIPMENT: In general, concrete pump shall be mobile and capable of fitting into tight, confined areas of a construction site.

Steel and rubber concrete pump hoses that attach to an outlet on the pump shall be included as necessary for the pumping application, with the hose diameter appropriate for the material being pumped (i.e. 3”-5” diameter hoses for pumping concrete, 2” hoses for pumping grout and shotcrete.)

Pump shall be able to supply and reach horizontal lengths from 20 to 150 feet, and be capable of meeting the needs of the project by providing a volume of up to 70 cubic yards per hour.

The pump equipment shall be furnished with a hopper to receive concrete from a ready mix truck. An agitator within the hopper shall keep fresh concrete flowing smoothly into the pumping cylinders. Hydraulic or mechanical pumping cylinders shall deliver constant pressure on the concrete in the hoses and uninterrupted flow. The pump shall be provided with a synchronized valve (e.g. gate valve, rock valve, swing valve, ball valve or C tube) to channel concrete into a single discharge hose.

CONSTRUCTION DETAILS: The Contractor shall deliver, set up, operate and remove the towable concrete pump to any construction location within Monroe County as directed by the County’s Project Manager. The contractor will be responsible for all maintenance, fuel, and equipment necessary to run the pump. The type of materials to be pumped shall be agreed to by the agency and contractor. The agency shall be responsible for installing bulkheads, vent pipes and fill tubes. The size and location of the tubes will be coordinated with the contractor based on the project and site conditions. The agency will schedule the pumping work and the vendor shall be ready to begin pumping at the scheduled time.

MAINTENANCE AND PROTECTION OF TRAFFIC: The agency shall be responsible for the maintenance and protection of traffic in accordance with the current Manual of Uniform Traffic Control Devices (MUTCD) and supplements.

The vendor will be responsible for maintenance and protection of traffic during delivery and pickup of the unit from the project site, in accordance with the current Manual of Uniform Traffic Control Devices (MUTCD) and supplements.

Item__ Concrete Pump Rental

METHOD OF MEASUREMENT: The work to be performed will be measured on an hourly basis from the scheduled start time for the pumping operations to the completion of the pumping project. A fixed mobilization price of $300 will be paid at the completion of the work for project coordination, consultation, delivery, setup, and removal of the unit from the jobsite. No additional time will be paid for travel to and from the construction site.

BASIS OF PAYMENT: The hourly price bid shall include the cost of furnishing all labor and equipment to satisfactorily operate a concrete pump as directed by Monroe County. Concrete material being pumped will be paid for the agency.

BASIS OF PAYMENT: The unit price will include all costs for equipment associated with use of the machine. Payment will be made by the hour.

Item No.	Description	Pay Unit
	Mobilization	$300 Fixed
	Concrete Pump Rental	Hour

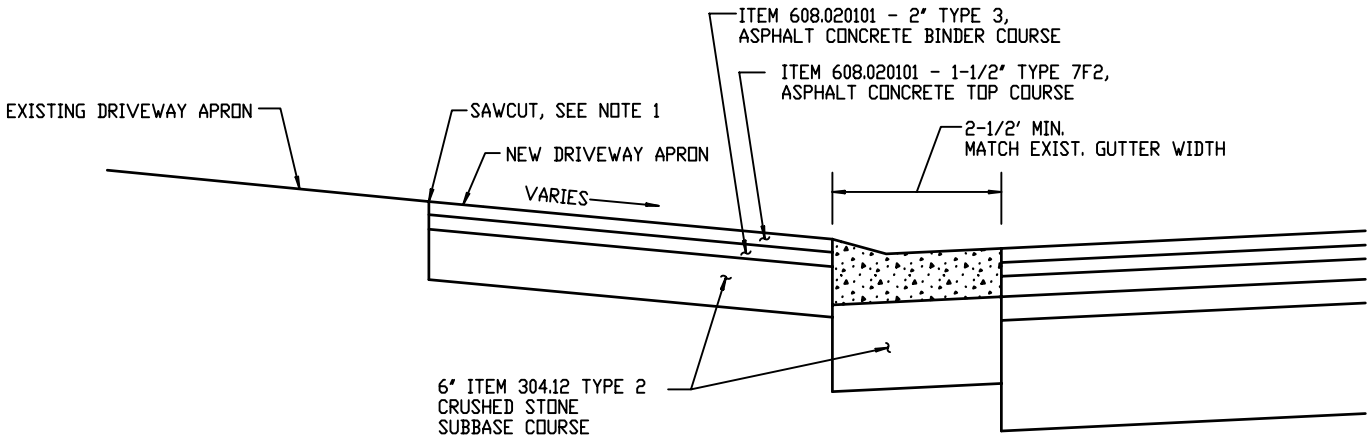

DETAIL WITH GUTTER

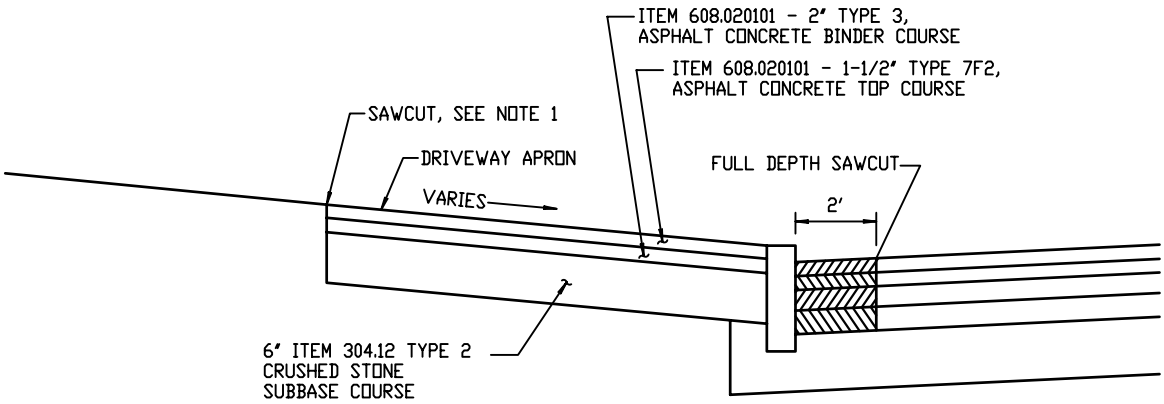

DETAIL WITH CURB

NOTES:

1. ALL PAVEMENT JOINTS SHALL BE SAWCUT AND TACK COATED.
2. TOPSOIL AND SEED ALL DISTURBED AREAS WITH TOPSOIL ITEM NO. 613.0101 AND SEED ITEM NO. 610.0203.

ASPHALT DRIVEWAY DETAILS

NOT TO SCALE

3/1/06

REVISED

ASPHALT PRICE ADJUSTMENT APPENDIX

Description

Price adjustments allowed will be based on the **September 1, 2014 average** of the F.O.B. terminal price per English ton of unmodified PG 64-22 binder without anti-stripping agent (base average F.O.B. terminal price). The new monthly average terminal price will be determined by the New York State Department of Transportation based on prices of preapproved primary sources of performance graded binder in accordance with the New York State Department of Transportation Standard Specification.

The **September 1, 2014** average terminal price is **$630/Ton**

NOTE: The same grade of asphalt cement used in establishing the base average F.O.B. terminal price shall be used in establishing the new average F.O.B. terminal price.

In the event that one or more of the New York State Department of Transportation preapproved sources discontinue posting a price for asphalt cement, the base average F.O.B. terminal **price shall not be recalculated.**

2. Price adjustments will be in accordance with the formula below and will be effective for deliveries made on and after the first of the month.

3. The **unit prices per english ton of bituminous concrete material** purchased from any award based on this specification will be subject to adjustment based on the following formula:

Price Adjustment (per ton) Asphalt	=	New Monthly Average (per english ton)	-	Base Average Terminal Price	x	Total % Asphalt Plus Fuel Allowance

4. The **unit prices per square yard of paver placed surface treat 'Novachip'** material purchased from any award based on this specification will be subject to adjustment based on the following formula:

'Novachip' Adjustment (per sq. yd.)	=	New Monthly Average (per english ton)	-	Base Average Terminal Price	X	.07 (Total % petroleum (7%)	x	0.03

5. The **unit prices per square yard of fiber reinforced surface treatment** material purchased from any award based on this specification will be subject to adjustment based on the following formula:

Fiber reinforced Surface treatment Adjustment (per sq. yd.)	=	New Monthly Average (per english ton)	-	Base Average Terminal Price	x	Total % Asphalt Plus Fuel Allowance	x	0.40
		235						

6. The **unit prices per gallon of liquid bituminous asphalt emulsions** material purchased from any award based on this specification will be subject to adjustment based on the following formula:

Price adjustment Per Gallon	=	New Monthly Average (per english ton)	-	Base Average Terminal Price	x	Total Allowable Asphalt & Fuel Allowance
		235				

ASPHALT PRICE ADJUSTMENT APPENDIX

NEW MONTHLY AVERAGE F.O.B. TERMINAL PRICE:
The average F.O.B. terminal price for unmodified **PG 64-22** binder without anti-stripping agent as determined by the New York State Department of Transportation per New York State Department of Transportation Standard Specification.

BASE AVERAGE F.O.B. TERMINAL PRICE:
The average F.O.B. terminal price of unmodified PG 64-22 binder without anti-stripping agent as determined by the New York State Department of Transportation.

TOTAL % ASPHALT PLUS FUEL BY MATERIAL TYPE
The percentage of total allowable asphalt and fuel for each item is as follows:

ITEM	% ASPHALT	+ FUEL ALLOWANCE	TOTAL % ASPHALT + FUEL ALLOWANCE
Type MC1 Binder Course	5.75	1	6.75
6.3 mm F2 Polymer Modified	6.7	1	7.7
Flexible Overlay (Smooth Seal)	7	1	8
Flexible Top	6.2	1	7.2
True & Leveling F9, Superpave HMA, (All ESAL)	**	1	*** %
Shim Course F9, Superpave HMA, (All ESAL)	8.25	1	9.25
Top Course 9.5 mm F2 Superpave HMA, (All ESAL)	6.2	1	7.2
Top Course 12.5 mm F2 Superpave HMA, (All ESAL)	5.5	1	6.5
Binder Course 19 mm F9 Superpave HMA, (All ESAL)	4.9	1	5.9
Binder Course 25 mm F9 Superpave HMA, (All ESAL)	4.5	1	5.5
Base Course 37.5 mm F9 Superpave HMA, (< 3 M ESAL's)	4.0	1	5.0
Paver placed surface treatment 'Novachip'	7.00	0	7.00 %
Asphalt Emulsions			
CMS-2	65	12.2	77.2 %
CRS-2	65	3.2	68.2 %
CRS-2p	65	3.2	68.2 %
CSS-1	57	0.2	57.2 %
CSS-1h	57	0.2	57.2 %
RS-2	63	3.2	66.2 %
RS-2p	63	3.2	66.2 %
HFRA	65	5	70%
HFMS-2	65	10.2	75.2 %
HFMS-2gh	75	3	78 %
HFMS-2h	65	3.2	68.2 %
HFRS-2	63	3.2	66.2 %
HFRS-2p	63	3.2	66.2 %
HFMS-2h Tack coat	40	0.2	40.2 %
RS-1h (Rapid breaking tack)	55	0.2	55.2 %
CSS-1h Tack Coat	57	0.2	57.2 %
PG 64-22 (AC-20 w/ fiber crack fill)	95	0	95 %
18-64	100	0	100 %
Polymer Crack fill (ASTM D6690)	56	0	56 %
MC 30	100	2	102%
DEC 50	25	25	50%

** The conversion factor will be computed separately using the conversion factors for the individual mixture used

ASPHALT PRICE ADJUSTMENT APPENDIX

EXAMPLE: Item Asphalt Hot Top Course 9.5 mm F2 Superpave
Base Average Price = $150.00
New Average Price = $160.00
Total % Asphalt plus Fuel = 6.2%

$160.00 - $150.00 x 0.062 = +$0.62 per English Ton

***Fuel Allowance represents allowance for energy (fuel, electricity, natural gas) used in the production of asphalt. It is a cost associated with the product and not intended to represent any trucking or hauling of product.**

NOTE:

All materials with identical numbers preceding the decimal and identical first and second number after the decimal receive the price adjustment shown for the base material.

Positive Price Adjustment number shall be added to original bid price per English ton.

Negative Price Adjustment number shall be subtracted from original bid price per English ton.

Price adjustments allowed by this contract shall be calculated and applied to the original prices. **There will not be price adjustments unless** the change amounts to more than $.10 per English ton from the original prices for asphalt hot mixes, and $0.011 for asphalt emulsions and 'novachip'. In these instances prices will revert back to the original prices.

All price adjustments will be computed to three decimal places.

Should these provisions result in a price structure which becomes unworkable, detrimental or injurious to the State or in prices which are not truly reflective of market conditions or which are deemed by the Commissioner to be unreasonable or excessive, and no adjustment in price is mutually agreeable, the Commissioner reserves the sole right upon ten days written notice mailed to the contractor to terminate any contract resulting from this bid opening.

Price adjustment shall be published by the State and issued to all contract holders, whose responsibility will be to attach the appropriate state notification (based on when the work was performed) to the payment invoice submitted to agency.

Work performed after the expiration of the contract, where no extension has been granted, resultant from purchase orders placed prior to expiration of the contract will receive the price adjustments in effect the last month of the contract.

Price adjustment for any contracts that are extended will be based on the new average for the month in which the work is done applying the same base established for that contract.

REVISED 1/18/08

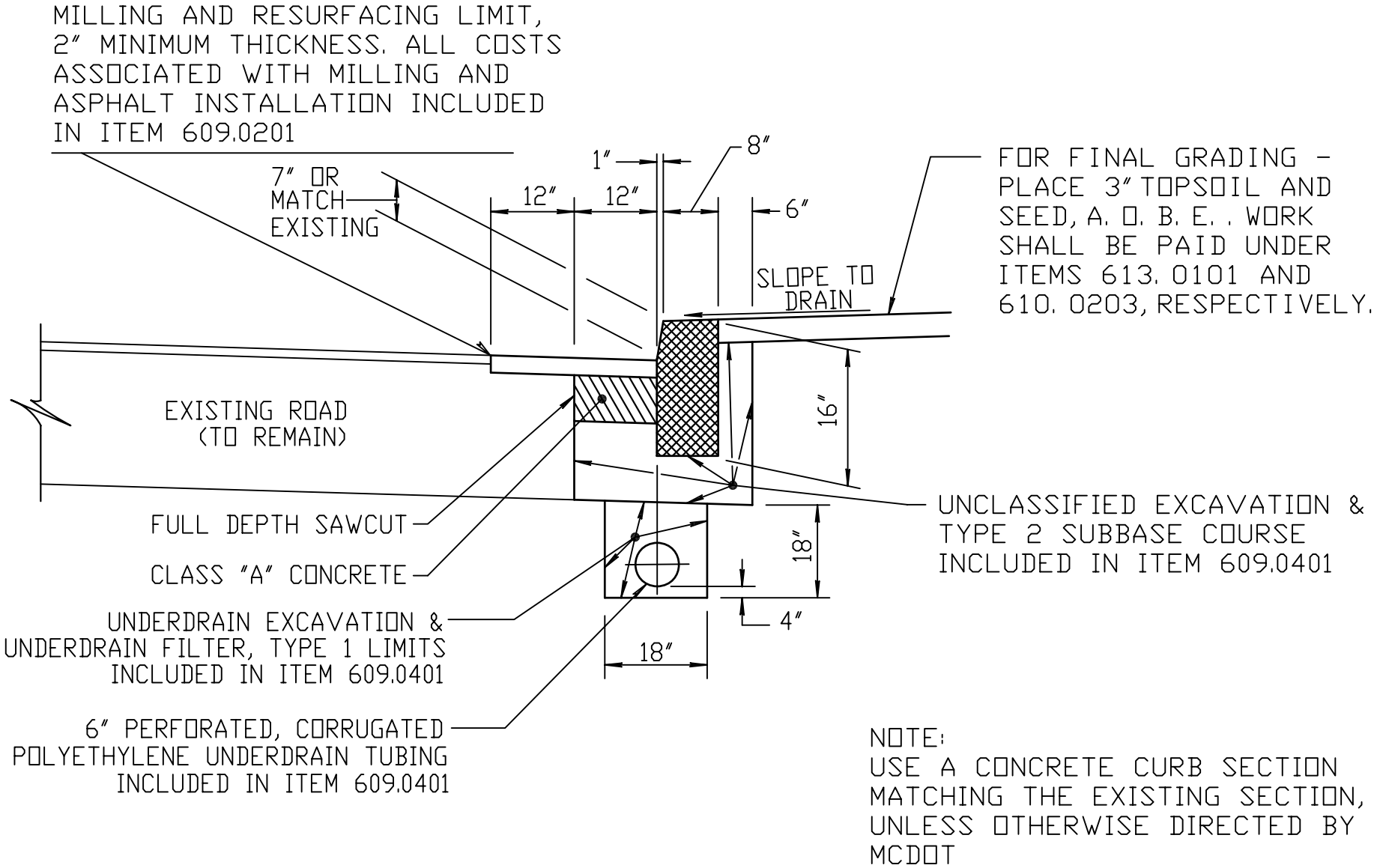

NOTE:
USE A CONCRETE CURB SECTION MATCHING THE EXISTING SECTION, UNLESS OTHERWISE DIRECTED BY MCDOT

ITEM 609.0401

CONCRETE CURB REPLACEMENT WITH PERFORATED UNDERDRAIN

NOT TO SCALE

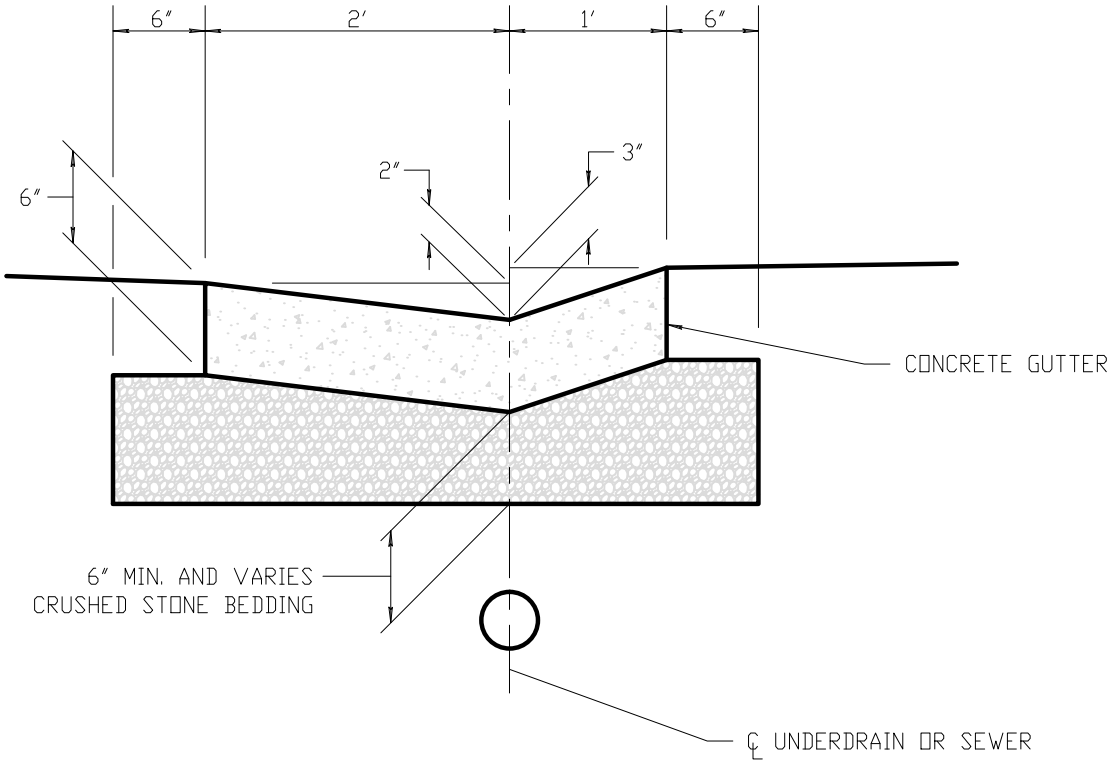

CONCRETE GUTTER

NOT TO SCALE

6/12/13

REVISED

REVISED

7/11/13

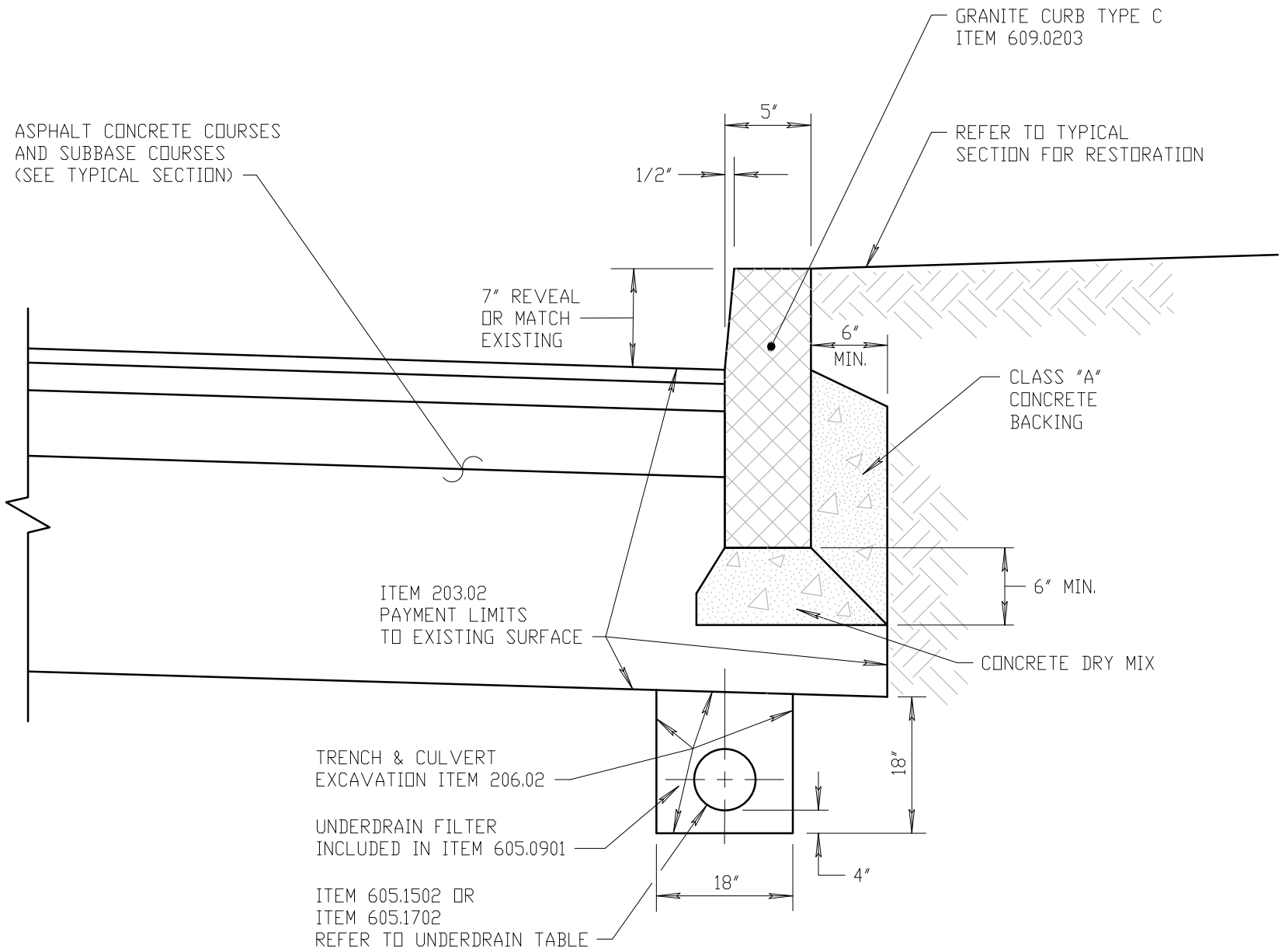

GRANITE CURB DETAIL WITH PERFORATED UNDERDRAIN

NOT TO SCALE