CONTRACT DATA SHEET

Monroe County Division of Purchasing
200 County Office Building, Rochester NY 14614

TITLE:	HIGHWAY MATERIALS – GROUP II
CONTRACT #:	0103-16
CONTRACT DATES:	03/01/16 – 02/28/17
BUYER: **PHONE:** **FAX:**	SHARON A. BERNDT 585-753-1110 585-753-1104
VENDOR(S):	VARIOUS – SEE ATTACHED LIST

HIGHWAY MATERIALS – GROUP II

Contract#	Vendor #	Vendor Name	Awarded
4700007273	101094	A H Harris and Son	Concrete Mix; Portland Cement; Black Beauty; Biaxial Geogrid Reinforcement Material; Geotextile Drainage Fabric; Erosion Control Silt Fence; Turbidity Curtain; Geotextile Slope Protection Temporary
4700007267	108992	Advanced Drainage Systems Inc.	PVC Pipe Products (ADS)/Drainage Products
4700007274	102252	Allied Building Products	Modified Stockpile Patching Materials (bag); Detectable Warning Paver Brick; Ice Melter Alternate – Pro Grade Commercial (Pallet & 50# Bag); Geotextile Drainage Fabric; Silt Filtration Bag; Geotextile Slope Protection Permanent
4700007275	101851	American Green Landscape	Topsoil – Screened (CY)
4700007276	102540	Barre Stone Products, Inc.	Type MC1 Binder Course, 6.3 mm F2 Polymer Modified (<0.3 M ESAL's); Flexible Overlay, Flexible Top, True & Leveling F9, Shim Course F9, Top Course 9.5 mm F2 & 12.5 mm F2, Binder Course (19 mm, 25 mm, 37.5 mm), Modified Stockpile Patching Materials (ton), Reclaimed Asphalt Pavement (Millings 1", 9/16", 3/8", Asphalt Millings Credit; Stone Aggregate (Quarry); Topsoil (Screened & Unscreened) (ton), Fill Dirt Material (ton), Select Structural Fill (ton), Mortar Sand, Grout Sand, Concrete Sand, Ice Control Sand-Aggregate A
4700007277	115300	Brongo Contracting & Supply	Topsoil – Screened & Unscreened (CY); Compost Topsoil (CY); Fill Dirt Material (CY); Material Hauling
4700007278	108017	Chemung Supply Corporation	Traffic Sign Posts (Sq. Tubing) 1-3/4"x1-3/4"x10', 2"x2"x10', 2-1/4"x2-1/4"x3'
4700007279	118224	Construction Distribution & Supply	Bituthene 4000 Membrane (3'x66.67' Roll); Bitutane WP-3000 Primer (5 gal pail)
4700007280	105323	Crossroads Highway Supply	Steel Adjustment Rings; Poly Manhole Rings
4700007281	108013	Dolomite Products Company, Inc.	Stone Aggregate (Quarry); Material Hauling; Stone Aggregate (Gravel Pit)- (#1 & #2 Crushed Stone, #1 Washed Crushed Stone, #1A Stone, #1A Washed Stone, #2 Stone, #2 Washed Stone,); Material Hauling; Fill Dirt Material (Ton); Mortar Sand; Ice Control Sand Aggregate A & B; Material Hauling
4700007282	102172	Eberl Iron Works	Green Channel Post; Centerline Delineators (500 units/box)
4700007283	118225	Fisher & Son Co., Inc.	Grass Seed General Mix (Highway Blend); Grass Seed Premium Mix (Pure Waters Blend); Grass Seed Quick Grow/Triple Perennial Ryegrass Mix: Grass Seed Annual Ryegrass; Hydroseed Mulch (Cellulose – Paper); Hydroseed Mulch (Wood & Cellulose Fiber Mixture); Hydroseed Tackifiers; Calcium Chloride (712-02)
4700007284	115301	Fulmont Ready Mix Inc.	Concrete Mixes Delivered
4700007285	115302	Greentech	Topsoil – Screened & Unscreened (CY); Compost Topsoil; Fill Dirt Material (CY)

HIGHWAY MATERIALS – GROUP II

Contract#	Vendor #	Vendor Name	Awarded
4700007286	105307	Hanson Aggregates New York LLC	Type MC1 Binder Course, 6.3 mm F2 Polymer Modified (<0.3 M ESAL's); Flexible Overlay, Flexible Top, True & Leveling F9, Shim Course F9, Top Course 9.5 mm F2 & 12.5 mm F2, Binder Course (19 mm, 25 mm, 37.5 mm), Reclaimed Asphalt Pavement Millings, 1" & 9/16"; Material Hauling; Stone Aggregate (Quarry) –-5/8",#1,#2, #3 Crusher Run, #1, #2 Crushed Stone; #1 Washed Crushed Stone; #1A Stone; 3/8", #1A, #1B, #2 Washed Stone, #1B, #2 Stone, #1 ST Washed Stone; Stone Filling (Fine); Stone Filling (Light); Material Hauling; Mortar Sand; Concrete Sand; Ice Control Sand (Aggregate A & B); Material Hauling (ton)
4700007287	107569	Innovative Municipal Products (US) Inc.	Plant Mixed Stockpile Patching Material; Modified Stockpile Patching Materials (ton & bag); Organic Based Snow & Ice Products – Magic Minus Zero; Caliber M2000 w/AP; Caliber M1000 w/AP; Meltdown 26% w/AP
4700007288	107998	Iroquois Rock Products	Type MC1 Binder Course, 6.3 mm F2 Polymer Modified (<0.3 M ESAL's); Flexible Overlay, Flexible Top, True & Leveling F9, Shim Course F9, Top Course 9.5 mm F2 & 12.5 mm F2, Binder Course (19 mm, 25 mm, 37.5 mm), Reclaimed Asphalt Pavement Millings, 1" & 9/16"; Modified Stockpile Patching Materials (ton); Asphalt Milling Credit; Material Hauling
4700007289	101590	JC Smith Inc.	Surface Applied Detectable Warning Materials; Type S Pre Blended Mortar Mix (ASTM C270); Super 5000 concrete Mix; Geotextile Bedding Fabric; Geotextile Undercut Separation Fabric; Geotextile Drainage Fabric; Sediment Filtration Mat; Woven Polythelene Nylon Sheets (20'x100')
4700007290	102473	Keeler Construction Co., Inc.	Material Hauling for Barre Stone
4700007291	103863	Macedon Landscaping	Topsoil, Screened (CY)
4700007292	109911	Millennium Roads, LLC	Organic Based Snow & Ice Products – Ice Ban 40/60; Ice Ban 30/70; Ice Ban 7/93; Organic Based Snow & Ice Products –Mixed – Ice Ban 40/60; Ice Ban 30/70; Ice Ban 7/93
4700007293	105512	Miller Brick Company	Common Sewer Brick; Patio Pavers; Highway Common Brick - Full Height & Half Height
4700007294	106119	Monroe Roadways	Topsoil – Screened & Unscreened (CY)
4700007295	105021	Morrison Excavating Inc.	Topsoil – Screened & Unscreened (CY); Material Hauling
4700007296	106859	R.M. Landscape, Inc.	Topsoil – Screened & Unscreened (CY); Compost Topsoil
4700007297	103382	Rochester Asphalt Materials	Asphalt Concrete Asphalt Courses – Binder Course, Polymer Modified, Flexible Overlay, Flexible Top, True & Leveling F9, Shim Course F9, Top Course 9.5mm, 12.5mm, 19 mm, 25mm, 37.5mm; Modified Stockpile Patching Materials (Ton); Asphalt Milling Credit; Material Hauling
4700007298	117640	Shelby Crushed Stone	Plant Mixed Stockpile Patching Material; Modified Stockpile Patching Materials (Ton)

HIGHWAY MATERIALS – GROUP II

Contract#	Vendor #	Vendor Name	Awarded
4700007299	117804	Spallina Materials, Inc.	Type MC1 Binder Course; 6.3 mm F2 Polymer Modified (<0.3 M ESAL's); True & Leveling F9; Top Course 9.5mm & 12.5mm; Binder Course 19mm & 37.5mm; Plant Mixed Stockpile Patching Material (ton); Topsoil – Screened & Unscreened (Ton); Compost Topsoil; Fill Dirt Materials (Ton); Select Structural Fill (Ton); Mortar Sand; Grout Sand; Concrete Sand; Ice Control Sand – Aggregate A & B
4700007300	116871	Taouk Development LLC	Topsoil – Screened & Unscreened (CY); Fill Dirt Material (CY)
4700007301	102589	The Duke Company	Embedded Preformed Detectable Warning Materials; Mortar Mix (80# Bag); Speedcrete Red Line, Green Line, Blue Line (50# Bag); Plastic Safety Fence; Polyethylene Snow Fence; Steel Snow Fence Post; Speedcrete 2028
4700007302	115304	Unique Paving Materials Corporation	Modified Stockpile Patching Materials (Ton)
4700007303	115305	Upscapes Nursery & Landscape Design Center	Topsoil – Screened & Unscreened (Ton); Topsoil – Screened & Unscreened (CY); Fill Dirt Material (Ton & CY)
4700007304	108897	U.S. Standard Sign	Aluminum Sign Blanks
4700007305	103822	Valley Sand & Gravel	Stone Aggregate (Gravel Pit) - #1 Washed Crushed Stone, #1A Stone, 3/8" Washed Stone, #1A Washed Stone, #2 Washed Stone, Screened Gravel; Fill Dirt Material (Ton); Select Structural Fill (Ton); Concrete Sand; Ice Control Sand – Aggregate A

TERMS AND CONDITIONS

BID ITEM: **HIGHWAY MATERIALS – GROUP II**

FOR: **Department of Transportation**

PURCHASING CONTACT: The Buyer, identified below, is the sole point of contact regarding this Bid from the date of issuance until the bids are opened and the results made public.

Sharon Berndt
Monroe County Division of Purchasing
200 County Office Building
39 West Main Street
Rochester, NY 14614
Email: sberndt@monroecounty.gov

All requests for bid clarification must be submitted in writing to the Buyer referenced above and received no later than close of business (5:00 PM Eastern Standard Time) on **Friday, December 18, 2015**.

All questions will be answered and documented in writing as an Addendum to the Bid. These will be sent out to all Bidders who received the original Bid no later than **Tuesday, December 22, 2015**.

DUPLICATE COPIES: **PLEASE SUBMIT YOUR BID IN DUPLICATE; THE ORIGINAL AND ONE (1) COPY.**

BID INFORMATION: At the time of bid, the bidder shall supply detailed specifications covering the item(s) contained herein and shall clearly indicate any areas in which item or items offered do not fully comply with the specifications contained herein.

SUBMITTAL OF FORMAL PROPOSAL: Bid proposal must be legible and submitted in the original form, bearing an original signature. **EMAILS AND FACSIMILES ARE NOT ACCEPTABLE.**

All bidders must submit proof that they have obtained the required **Workers' Compensation** and **disability benefits** coverage or proof that they are exempt if awarded the contract.

SPECIFICATION ALTERATIONS: Specifications will be construed to be complete and be considered the entire description of the goods or services upon which Monroe County is now seeking bids. **Only formal written addenda can materially alter this set of specifications**. No verbal statement made by a Monroe County employee or anyone else is binding nor shall such statement be considered an official part of this public bid proposal.

BRAND REFERENCE: References to a manufacturer's product by brand name or number are done solely to establish the minimum quality and performance characteristics required. Bidders may submit bids on alternates, but must attach two (2) copies of manufacturer specifications for any alternate at the time of the bid. Further, the bidder must demonstrate that the alternate proposed has a sufficient operating track record to show the equipment will perform per the specified brand. The acceptance of a bidder's alternate rests solely with Monroe County.

QUALIFIED BIDDER: Each bidder must be prepared to present satisfactory proof of his capacity and ability to perform this contract. Such proof may include, but is not limited to, an inspection of the bidder's facilities and equipment, financial statements, references and performance of similar contracts. **The Purchasing Manager reserves the right to reject any bid where the bidder cannot satisfy the County as to their ability to perform. Monroe County reserves the right to reject any and all bids** if the Monroe County Purchasing Manager deems said action to be in the best interests of Monroe County.

METHOD OF AWARD: Monroe County intends to award one or more contract(s) to the lowest responsive and responsible bidder(s). The County reserves the right to award the bid as a **whole or by Group or item, whichever method is in the best interest of the County.** Bidders **are not required to bid on every Item included in the bid**. **The County reserves the right to reject any and all bids** if the Purchasing Manager deems said action to be in the best interest of the County.

CONTRACT TERM: Contract will start with the date of the contract award and run through **February 28, 2017**, with the option to renew the contract up to four (4) additional twelve (12) month periods with the mutual consent of both parties.

PRICE CHANGES: Price changes may be proposed by either party no later than forty-five (45) days prior to contract extension, based upon manufacturer price changes which must be supported with documentation. Should price changes not be acceptable to both parties, the contract will not be extended. Prices may change only at the time of extension.

MINIMUM ORDER: No minimum order is specified for this contract. Agencies must be able to order as needed. **Political subdivisions and others authorized by law may participate in this contract**.

DELIVERY: All deliveries to be F.O.B. Monroe County to agency as specified by a Purchase Order. Delivery costs must be built into the unit prices bid. Deliveries must be made within **two (2) weeks** after receipt of purchase order number. The County reserves the right to terminate the contract in the event the specified delivery time is not met.

PURCHASE ORDER ISSUANCE: Delivery of services may be directed by the receipt of a Purchase Order only. **Items that are not part of this bid will not be paid for by Monroe County**. As to all purchase orders issued by Monroe County, exceptions may only be authorized, in writing, by the Purchasing Manager or his authorized agent prior to delivery.

BILLING PROCEDURE: All invoices for items sold any authorized agency as a result of this contract must be billed in the following manner: Purchase Order #, Quantity, Description of Item Purchased, BP#, Item #, Extension and Total. **ALL INVOICES MUST BE MARKED WITH THE PURCHASE ORDER NUMBER. INVOICES WITHOUT THIS INFORMATION WILL NOT BE PROCESSED FOR PAYMENT.**

WARRANTY/ GUARANTEE: All warranties by manufacturer shall apply. Bidder shall, as part of its proposal, furnish its warranty/guarantee for all goods/services to be furnished hereunder. As a minimum, Bidder shall warrant all goods for a period of one (1) year from date of acceptance. Bidder shall be obligated to repair or replace all defects in material or workmanship which are discovered or exist during said period. All labor, parts and transportation shall be at Bidder's expense.

UNCONTEMPLATED PURCHASES: Monroe County reserves the right to request separate bids for such quantities of items on this contract that may be best procured via separate public bid offering and to otherwise act in furthering its own best interests.

SUBCONTRACT: The Contractor **shall not subcontract any work without first obtaining the written consent of the Monroe County Purchasing Manager**.

RELATED ITEMS: The County reserves the right to add miscellaneous related items to this contract during the contract term upon agreement by both parties as to the price. Approval must be given in writing by the Purchasing Manager or his Designee.

REPORT OF PURCHASE: The Contractor must, upon request, provide the County Purchasing Manager with detailed information showing how much of each item was delivered, to any and all agencies under this contract. This includes deliveries to not only the County but any other municipality or agency which orders from this contract.

OTHER AGENCIES: The Contractor(s) **must** honor the prices, terms and conditions of this contract with political subdivisions or districts located in whole or in part within Monroe County. In addition, the contractor **may**, but is not required to, extend the prices, terms and conditions of this contract to any political subdivision or district located in New York State. Usage of this contract by any of these other political subdivisions or districts will have to be coordinated between that subdivision or district and the contractor. Orders placed against this contract between any subdivision or district will be contracts solely between the Contractor(s) and those entities. Monroe County will not be responsible for, nor will it have any liability or other obligation for, such contract between the Contractor(s) and any third party.

INDEMNIFICATION: The Contractor agrees to defend, indemnify and save harmless the County, its officers, agents, servants and employees from and against any and all liability, damages, costs or expenses, causes of action, suits, judgments, losses and claims of every name not described, including attorneys' fees and disbursements, brought against the County which may arise, be sustained, or occasioned directly or indirectly by any person, firm or corporation arising out of or resulting from the performance of the services by the Contractor, arising from any act, omission or negligence of the Contractor, its agents and employees, or arising from any breach or default by the Contractor under this Agreement. Nothing herein is intended to relieve the County from its own negligence or misfeasance or to assume any such liability for the County by the Contractor.

NOTICE OF JOB VACANCIES

a) The contractor recognizes the continuing commitment on the part of Monroe County to assist those receiving temporary assistance to become employed in jobs for which they are qualified and the County's need to know when jobs become available in the community.

b) The contractor agrees to notify the County when the contractor has or is about to have a job opening for a full time position within Monroe County or any contiguous county. Such notice shall be given as soon as practicable after the contractor has knowledge that a job opening will occur. The notice shall contain information that will facilitate the identification and referral of appropriate candidates in a form and as required by the Employment Coordinator. This would include at least a description of conditions for employment, including the job title and information concerning wages, hours per work week, location and qualifications (education and experience).

c) Notice shall be given in writing to:

Employment Coordinator
Monroe County Department of Human and Health Services
Rm 535
691 St. Paul St.
Rochester, NY 14605
Telephone: (585) 753-6322
Fax: (585) 753-6308

d) The contractor recognizes that this is an opportunity to make a good faith effort to work with Monroe County for the benefit of the community. Nothing contained in this provision, however, shall be interpreted as an obligation on the part of the contractor to employ any individual who may be referred by or through the County for job openings as a result of the above notice. Any decisions made by the contractor to hire any individual referred by or through the County shall be voluntary and based solely upon the contractor's job requirements and the individual's qualifications for the job, as determined by the contractor.

e) If the contractor is a local municipality within Monroe County, said municipality shall be subject to the above subparagraphs, except that said municipalities shall not be required to give notice where the position is subject to a published civil service list.

COMPLIANCE WITH FEDERAL SINGLE AUDIT ACT

In the event the Contractor is a recipient through this contract, directly or indirectly of any funds of or from the United States Government, Contractor agrees to comply fully with the terms and requirements of Federal Single Audit Act [Title 31 United States Code, Chapter 75], as amended from time to time. The Contractor shall comply with all requirements stated in Federal Office of Management and Budget Circulars A-102, A-110 and A-133 and such other circulars, interpretations, opinions, rules or regulations that may be issued in connection with the Federal Single Audit Act.

If on a cumulative basis the Contractor expends Five Hundred Thousand and no/100 Dollars ($500,000.00) or more in federal funds in any fiscal year, it shall cause to have a single audit conducted, the Data Collection Form (defined in Federal Office of Management and Budget Circular A-133) shall be submitted to the County; however, if there are findings or questioned costs related to the program that is federally funded by the County, the Contractor shall submit the complete reporting package (defined in Federal Office of Management and Budget Circular A-133) to the County.

If on a cumulative basis the Contractor expends less than Five Hundred Thousand and no/100 Dollars ($500,000.00) in federal funds in any fiscal year, it shall retain all documents relating to the federal programs for three (3) years after the close of the Contractor's fiscal year in which any payment was received from such federal programs.

All required documents must be submitted within nine (9) months of the close of the Contractor's fiscal year end to:

Monroe County Internal Audit Unit
304 County Office Building
39 West Main Street
Rochester, New York 14614

The Contractor shall, upon request of the County, provide the County such documentation, records, information and data and response to such inquiries as the County may deem necessary or appropriate and shall fully cooperate with internal and/or independent auditors designated by the County and permit such auditors to have access to, examine and copy all records, documents, reports and financial statements as the County deems necessary to assure or monitor payments to the Contractor under this contract.

The County's right of inspection and audit pursuant to this contract shall survive the payment of monies due to Contractor and shall remain in full force and effect for a period of three (3) years after the close of the Contractor's fiscal year in which any funds or payment was received from the County under this contract.

Monroe County Department of Transportation

2016 Highway Material Group II

Technical Specifications

The specification item description will provide the reference between the technical specification and the price bid sheet proposal.

ITEM _____ ASPHALT CONCRETE HOT MIX COURSES

DESCRIPTION:

Provide asphalt concrete material at the vendor's plant F.O.B. utilizing County trucks.

MATERIAL REQUIREMENT:

Material shall meet the requirements of the New York State Department of Transportation Standard Specifications, Section 400, latest revision, for asphalt concrete materials with the following exceptions.

The aggregate gradation for the following mixes shall be as follows:

Sieve	Flexible Overlay/ Smooth Seal	Flexible Top	MC1 Binder
	% Passing	% Passing	% Passing
1"		100	100
½"	100	95 – 100	90 – 100
¼"	90 –100	78 – 98	60 – 85
1/8"	65 – 85	34 – 58	42 – 72
# 20	30 – 45	12 – 30	18 – 42
# 40	18 – 35	6 – 22	12 – 32
# 80	8 – 15	4 – 12	6 –18
# 200	3 - 8	2 – 6	2 - 18
Asphalt Content %	6.0 – 8.0	5.7 – 6.7	5.0 – 6.5

The following mixes shall be made produced utilizing performance graded binders meeting the criteria for PG 64-28:

True & Leveling F9, Superpave HMA, (< 0.3 M ESAL's)
Shim Course F9, Superpave HMA, (< 0.3 M ESAL's)
6.3mm F2 Polymer modified HMA (< 0 .3 M ESAL's)
Top Course 9.5 mm F2 Superpave HMA, (< 0.3 M ESAL's)
Top Course 12.5 mm F2 Superpave HMA, (< 0.3 M ESAL's)
Binder Course 19 mm F9 Superpave HMA, (< 0.3 M ESAL's)
Binder Course 25 mm F9 Superpave HMA, (< 0.3 M ESAL's)
Base Course 37.5 mm F9 Superpave HMA, (< 0.3 M ESAL's)

ASPHALT PRICE ADJUSTMENTS:

Asphalt price adjustments will be made according to the provisions provided in the asphalt adjustment appendix.

BASIS OF AWARD:

The County or a local municipal subdivision will select the asphalt vendor based upon the lowest total cost of the following elements:

1. Round trip distance (in miles) from the asphalt plant to the midpoint of the project multiplied by $0.40 per english ton of asphalt per mile.
2. Material cost.
3. Production rate of asphalt material for project at the plant.
4. The County reserves the right to select the asphalt vendor for projects that do not require a paver and/or are less than 200 english tons per day.

QUALIFICATION OF BIDDER:

No bid will be considered unless firm submitting same can meet the following conditions:

1. That it owns or leases, manages and controls a plant adequate for and devoted to the manufacture of the item which it proposes to furnish.

2. Material furnished under these contracts shall be produced in an approved bituminous mixing plant meeting the requirements outlined in Section 401 or 402 of the New York State Department of Transportation Standard Specifications, latest revision. An approved plant shall be in operation at the location indicated by bidder herein within the (12) twelve month period prior to the bid opening date.

3. Bidder must indicate in the Invitation for Bids, plant locations and/or the NYS DOT Facility number from which material will be supplied in the event of award.

METHOD OF MEASUREMENT:

The quantity of material to be paid for shall be measured by the English Ton.

BASIS OF PAYMENT:

The bid price will be for material by the English ton

ITEM _____ ASPHALT CONCRETE HOT MIX COURSES

Payment will be made under:

Item Description	Pay Unit
Type MC1 Binder Course / County #1 Binder	Ton
6.3 mm F2 Polymer Modified, (< 0.3 M ESAL's)	Ton
Flexible Overlay (Smooth Seal)	Ton
Flexible Top	Ton
True & Leveling F9, Superpave HMA, (< 0.3 M ESAL's)	Ton
Shim Course F9, Superpave HMA, (< 0.3 M ESAL's)	Ton
Top Course 9.5 mm F2 Superpave HMA, (< 0.3 M ESAL's)	Ton
Top Course 12.5 mm F2 Superpave HMA, (< 0.3 M ESAL's)	Ton
Binder Course 19 mm F9 Superpave HMA, (< 0.3 M ESAL's)	Ton
Binder Course 25 mm F9 Superpave HMA, (< 0.3 M ESAL's)	Ton
Base Course 37.5 mm F9 Superpave HMA, (< 0.3 M ESAL's)	Ton

ITEM _____PLANT MIXED ASPHALT PATCHING MATERIAL

DESCRIPTION:

This material shall be a plant mixed pavement patching material capable of storage in a stockpile composed of mineral aggregates, bituminous materials, and polymer fibers. The mix provided shall conform to one of the asphalt mixtures described in the Table of Composition herein.

Regardless of the material provided, it shall be uniform, workable, and have satisfactory setting properties at the time of delivery.

MATERIAL REQUIREMENT:

Patching material shall be produced using hot mix asphalt batch plants in accordance with the requirements of the New York State Department of Transportation Standard Specifications, Section 401, latest revision, except as modified herein.

1. Aggregates - Fine aggregate shall conform to section NYSDOT Section 703-01, Fine Aggregate. Course aggregate shall conform to NYSDOT Section 703-02, Coarse Aggregate. Crushed stone, crushed gravel, or approved crushed slag may be used.
2. Mineral Filler - Mineral filler, if used, shall conform to the requirements of NYSDOT Section 703-08, Mineral Filler.
3. Bituminous Materials - The bituminous material shall conform to the requirements outlined in NYSDOT Section 702, Bituminous Materials, or the Producer may elect to use an alternative bituminous material with or without modifying agents. Prior approval shall be obtained from the Associate Engineer - Highways for the use of alternative materials. For any bituminous material not listed in NYSDOT Section 702, Bituminous Materials, the Producer shall provide specifications for the alternative material to the Associate Engineer – Highways for approval.
4. Anti-Stripping Mixtures - An anti-stripping agent approved by the Associate Engineer - Highways shall be used as needed to meet the stripping test requirements. This may be incorporated with the bituminous material at the refinery or at the mixing plant.

Composition or Mixtures: The aggregate gradation, fiber and bituminous material quantities shall meet the requirements noted below.

The Producer shall submit a Job Mix Formula on forms available at the NYSDOT Regional Offices. The following information shall be provided with the Job Mix Formula submission:

a. Aggregate gradation band and aggregate types.
b. Bituminous Material - amount and type.
c. Fiber Material - description and quantity.
d. Description and quantities of additives, if used.
e. Temperature ranges for material preparation.

ITEM _____PLANT MIXED ASPHALT PATCHING MATERIAL

The Job Mix Formula shall be submitted to MCDOT for approval.. The Job Mix Formula shall be approved by the Associate Engineer – Highways and received by the Producer prior to the production of any mixture.

TABLE OF COMPOSITION
FIBER REINFORCED ASPHALT PATCHING MIXTURES
GENERAL LIMITS AND JOB MIX FORMULA TOLERANCES

Sieve Size	Coarse Mix		Intermediate Mix		Fine Mix	
	% Passing	Tol (1)	% Passing	Tol (1)	% Passing	Tol (1)
1”	100	-				
½”	95 - 100	-	100	-	100	-
¼”	55 - 75	+5	90 - 100	-	90 - 100	-
1/8”	15 – 40	±6	12 – 40	±6	35 - 60	±6
#80	0 – 5	±2	0 – 5	±2	2 - 10	±3
#200	-		-		0 - 5	±2
Bituminous Material						
	4.0 – 7.5	±0.4	4 - 8	± 0.4	5.5 – 8.0	± 0.4

(1) All aggregate percentages are based on the total weight of the aggregate.
(2) Bituminous material percentage is based on the total weight of the mix and shall include any additives.

Preparation of Mixtures: The aggregate shall be introduced into the pugmill at a temperature to eliminate free moisture on the aggregate surface. The mixture temperature shall be no greater than 212 deg. F. The net mixing time shall be sufficient to insure uniform coating after all materials are in the pugmill. Preparation of the mixture shall conform to the specification requirements outlined in NYSDOT Section 401, Plant Mix Pavements - General, except that automatic proportioning and recording equipment is not required.

Inspection, Testing & Acceptance: The Producer shall contact the MCDOT Associate Engineer – Highways having jurisdiction for his plant to arrange for an independent testing firm’s Inspector to inspect the preparation of mixtures. If inspection is not performed at the time of mixture preparation, samples from the stockpile shall be tested by the Department to determine the acceptability of the mixture prior to use for patching.

The following stripping test shall be conducted on the plant mixed material:

STRIPPING TEST:

A suitable size sample of the plant mixed material shall be permitted to cure at normal laboratory temperature for at least 24 hours after which it shall be placed in a glass jar, fitted with a tight cover, and completely covered with distilled water. The jar and contents shall then

be allowed to stand for a period of 24 hours at normal laboratory temperature (approximately 70 deg. F.). The sample shall then be shaken vigorously for a period of 15 minutes. The water shall then be poured from the jar and the sample removed to a flat surface and be permitted to air dry after which it shall be visually examined for stripping of the bituminous film from the aggregate. The aggregate surfaces shall be at least 90 percent coated with bituminous film. Fibers stripped of bituminous material shall not be included as part of the determination of bituminous material stripping from aggregate surfaces.

The initial approval of a mixture or the initial acceptance of material shall in no way preclude further examination and testing if unsatisfactory results are achieved. The acceptance at any time shall not bar its future rejection.

METHOD OF MEASUREMENT:

The bulk material quantity shall be measured by the English Ton.
The packaged material (bagged / bucket) shall be measured by the pound.

BASIS OF PAYMENT:

Payment will be made under:

Item No.	Item Description	Pay Unit
	Plant Mixed Asphalt Patching Material	Ton
	Packaged (bagged / bucket) Asphalt Patching Material	Pound

ITEM _____MODIFIED ASPHALT PATCHING MATERIAL

DESCRIPTION:

This material shall be a plant mixed pavement patching material. The bulk material shall be capable of storage in a stockpile composed of mineral aggregates, bituminous materials, and polymer fibers. The bagged or bucket patch shall meet all the criteria of the bulk mix. The mix provided shall conform to one of the asphalt mixtures described in the Table of Composition herein.

Regardless of the material provided, it shall be uniform, workable, and have satisfactory setting properties at the time of delivery.

MATERIAL REQUIREMENT:

Material shall meet the requirements of the New York State Department of Transportation Standard Specifications, Section 401, latest revision, except as modified herein.

1. Aggregates - Fine aggregate shall conform to section NYSDOT Section 703-01, Fine Aggregate. Course aggregate shall conform to NYSDOT Section 703-02, Coarse Aggregate. Crushed stone, crushed gravel, or approved crushed slag may be used.
2. Mineral Filler - Mineral filler, if used, shall conform to the requirements of NYSDOT Section 703-08, Mineral Filler.
3. Bituminous Materials - The bituminous material shall be one of the following or an approved equal:

BRAND NAME	MANUFACTURER
Perma-Patch®	Perma-Patch, Inc.
UPM®	UNIQUE PAVING MATERIALS
MC-400P	KOCH MATERIALS CO.
QPR®	QPR, A DIVISION OF LAGARGE N.A.
SK-MOD	SUIT KOTE CORP.
NORJOHN SPC	NORJOHN LTD.
DUROPATCH 115	GORMAN BROS.
I.A.R.	I.M.U.S., INC.
MAC-V, EcoPatch®	MIDLAND ASPHALT CORP.
BOND X	SEABOARD ASPHALT PRODUCTS, INC.
SYLCRETE EV	SYLCRETE CORP.
HYPERPATCH	VESTAL ASPHALT, INC.
PERFORMIX	SEABOARD ASPHALT PRODUCTS, INC.
OPTIMIX	OPTIMIX, INC.
TOP MIX	TECH MIX
PARCO PATCH	PECKHAM MATERIALS CORP.
Quikrete® Black Top Patch	Quikrete Companies

4. Anti-Stripping Mixtures - An anti-stripping agent approved by the Associate Engineer - Highways shall be used as needed to meet the stripping test requirements. This may be incorporated with the bituminous material at the refinery or at the mixing plant.

Composition or Mixtures: The aggregate gradation, fiber and bituminous material quantities shall meet the requirements noted below.

The Producer shall submit a Job Mix Formula on forms available at the NYSDOT Regional Offices. The following information shall be provided with the Job Mix Formula submission:

a. Aggregate gradation band and aggregate types.
b. Bituminous Material - amount and type.
c. Fiber Material - description and quantity.
d. Description and quantities of additives, if used.
e. Temperature ranges for material preparation.

The Job Mix Formula shall be submitted to MCDOT for approval. The Job Mix Formula shall be approved by the Associate Engineer – Highways and received by the Producer prior to the production of any mixture.

TABLE OF COMPOSITION
FIBER REINFORCED ASPHALT PATCHING MIXTURES
GENERAL LIMITS AND JOB MIX FORMULA TOLERANCES

Sieve Size	Coarse Mix		Intermediate Mix		Fine Mix	
	% Passing	Tol (1)	% Passing	Tol (1)	% Passing	Tol (1)
1”	100	-				
½”	95 - 100	-	100	-	100	-
¼”	55 - 75	+5	90 - 100	-	90 - 100	-
1/8”	15 – 40	±6	12 – 40	±6	35 - 60	±6
#80	0 – 5	±2	0 – 5	±2	2 - 10	±3
#200	-		-		0 - 5	±2
Bituminous Material						
	4.0 – 7.5	±0.4	4 - 8	± 0.4	5.5 – 8.0	± 0.4

(1) All aggregate percentages are based on the total weight of the aggregate.
(2) Bituminous material percentage is based on the total weight of the mix and shall include any additives.

Preparation of Mixtures: The aggregate shall be introduced into the pugmill at a temperature to eliminate free moisture on the aggregate surface. The mixture temperature shall be no greater than 215 deg. F. The net mixing time shall be sufficient to insure uniform coating after all

materials are in the pugmill. Preparation of the mixture shall conform to the specification requirements outlined in NYSDOT Section 401, Plant Mix Pavements - General, except that automatic proportioning and recording equipment is not required.

Inspection, Testing & Acceptance: The Producer shall contact the MCDOT Associate Engineer – Highways having jurisdiction for his plant to arrange for an independent testing firm's Inspector to inspect the preparation of mixtures. If inspection is not performed at the time of mixture preparation, samples from the stockpile shall be tested by the Department to determine the acceptability of the mixture prior to use for patching.

The following stripping test shall be conducted on the plant mixed material:

STRIPPING TEST:

A suitable size sample of the plant mixed material shall be permitted to cure at normal laboratory temperature for at least 24 hours after which it shall be placed in a glass jar, fitted with a tight cover, and completely covered with distilled water. The jar and contents shall then be allowed to stand for a period of 24 hours at normal laboratory temperature (approximately 70 deg. F.). The sample shall then be shaken vigorously for a period of 15 minutes. The water shall then be poured from the jar and the sample removed to a flat surface and be permitted to air dry after which it shall be visually examined for stripping of the bituminous film from the aggregate. The aggregate surfaces shall be at least 90 percent coated with bituminous film. Fibers stripped of bituminous material shall not be included as part of the determination of bituminous material stripping from aggregate surfaces.

The initial approval of a mixture or the initial acceptance of material shall in no way preclude further examination and testing if unsatisfactory results are achieved. The acceptance at any time shall not bar its future rejection.

METHOD OF MEASUREMENT:

The bulk material quantity shall be measured by the English Ton.
The packaged material (bagged / bucket) shall be measured by the pound.

BASIS OF PAYMENT:

Payment will be made under:

Item Description	Pay Unit
Modified Plant Mixed Asphalt Patching Material	Ton
Packaged (bagged / bucket) Asphalt Patching Material	Pound

ITEM _____ RECLAIMED ASPHALT PAVEMENT (RAP) / MILLINGS & ASPHALT MILLINGS CREDIT

DESCRIPTION:

Provide a credit for asphalt millings accepted at a specific location, from Monroe County or one of its political subdivisions or; provide RAP / millings processed asphalt milling material F.O.B. at vendor's plant utilizing County trucks.

MATERIAL REQUIREMENT:

Material provided shall be exclusively asphalt pavement free from soil organics, or other deleterious materials. The material gradation shall meet the following criteria:

- 1" minus
- 9/16"
- 3/8"

METHOD OF MEASUREMENT:

The quantity of material to be paid for (or credited) shall be measured by the English Ton, where an approved scale is available.

BASIS OF PAYMENT:

Payment will be made under:

Item No.	Item Description	Pay Unit
	Asphalt Millings Credit	Ton
	1" RAP /Millings	Ton
	9/16" RAP /Millings	Ton
	3/8" RAP /Millings	Ton

ITEM _____ MATERIAL HAULING

DESCRIPTION:

This item shall include the hauling of construction materials from the vendor's plant, pit or quarry to any point in Monroe County. Transportation (hauling) costs shall be based on two (2) unit prices. One price will be bid for transportation for 0 – 1 mile, and one price will be bid for any additional miles (one way).

For loading, hauling and delivery of stone fill (heavy) a fixed price per ton will be added the bid price for the material.

MATERIAL REQUIREMENT:

None specified.

DELIVERY REQUIREMENT:

The use of this Material Hauling Item can ONLY be used for a minimum single delivery load of 18 Tons.

METHOD OF MEASUREMENT:

The quantity for payment will be based on the actual miles traveled one way, for each ton or cy of material delivered. The material bid unit cost and the material hauling cost will be paid by the same unit.

For loading, hauling and delivery of stone fill (heavy) a fixed price per ton contained in the proposal will be added to the bid price for the material. This price is to cover the additional labor, equipment and handling costs associated with loading of the heavy stone fill into specific trucks, as well as the delivery of the material to the project site. The special loading, hauling and delivery charge shall be added to each the ton of material delivered. **This additional fixed price per ton cost in the proposal only applies to the hauling of the stone fill (Heavy).**

BASIS OF BID:

A. The 0 to 1 mile price will be the bid price (per ton or cy)for any distance traveled up to and including one mile. This 0 to 1 mile material hauling bid price will be **added** to the material cost. The final figure will constitute the cost to deliver one ton of material up to one mile (one way).

B. The 1 + mile price will be the bid price (per ton or cy) for any distance traveled after the first mile. This 1+ mile bid price will be multiplied by the total number of miles (less the first mile), added to the bid price for 0 to 1 mile, **and then added** to the material cost. This final figure will constitute the cost to deliver one ton of material the total number of miles (one way).

ITEM _____ MATERIAL HAULING

BASIS OF PAYMENT:

Payment will be made under:

Item No.	Description	Pay Unit
	Material hauling cost for 0 to 1 mile per ton of material	Ton
	Material hauling cost for > 1 mile per ton of material	Ton
	Material hauling cost for 0 to 1 mile per CY of material	CY
	Material hauling cost for > 1 mile per CY of material	CY
	Material hauling and loading for Stone Filling (Heavy) **ONLY** (Additional Charge**).**	Fixed price per ton

ITEM _____BITUMINOUS MATERIAL (LIQUID) TACK COAT IN FIVE (5) GALLON METAL PAILS:

DESCRIPTION:

Provide bituminous liquid tack coat material in five (5) gallon metal pails at bidder's plant F.O.B. utilizing County vehicles.

MATERIAL REQUIREMENT:

Material shall meet the requirements of the New York State Department of Transportation Standard Specifications, Section 702-90, latest revision, for bituminous liquid tack coat material.

The bidder shall have a minimum of 10 (ea) 5 gallon pails of liquid tack coat available at all times.

METHOD OF MEASUREMENT:

The quantity of material to be paid for shall be measured by the number of five (5) gallon pails.

BASIS OF PAYMENT:

Payment will be made under:

Item No.	Item Description	Pay Unit
	Bituminous Liquid Tack Coat (5 Gallon Metal Pails)	5 Gallon Pails

ITEM _____ STONE AGGREGATES (QUARRY)
STONE AGGREGATES (GRAVEL PIT)

DESCRIPTION:

Provide stone aggregate material at the vendor's plant F.O.B. utilizing County trucks.

MATERIAL REQUIREMENT:

Material shall meet the requirements of the New York State Department of Transportation Standard Specifications, Sections 304, 620& 703-02 coarse aggregate, latest revision as appropriate.

Items specified as "washed" shall conform to the provisions of Table 703-3, Physical Requirements, and Footnote 3, (NYSDOT Standard Specifications) as it pertains to "surface treatments and cold mix bituminous pavements."

Items specified as 3/8W, CR-5/8, CR-1, CR-2, refer to maximum size of aggregate 3/8", 5/8", 1", 2", respectively.

Items specified as crusher run shall conform to all the provisions of Section 203 & 302 New York State Specifications with the exception that the usage of crushed concrete and masonry products will be allowed for the creation of Recycled Concrete.

METHOD OF MEASUREMENT:

The quantity of material to be paid for shall be measured by the English Ton

BASIS OF BID:

Unit price bid shall be per ton and include all costs of furnishing and loading the material F.O.B. County trucks at bidders pit or quarry. If an approved scale is not available a price per cubic yard will be accepted as indicated in the proposal. Bidders should not bid both a cubic yard and per ton price.

It will be required that reasonable quantities of stone sizes bid upon shall be available at all times during the term of the contract.

The County also requests a unit price per ton or CY for plant mixing of aggregates to facilitate a specific gradation of sized aggregates to be determined by a municipality.

ITEM _____ STONE AGGREGATES (QUARRY)
STONE AGGREGATES (GRAVEL PIT)

BASIS OF PAYMENT:

Payment will be made under either unit as indicated in the bid proposal:

Item No.	Item Description	Pay Unit
	5/8" Crushed Stone	Ton
	5/8" Crusher Run	Ton
	#1 Crushed Stone	Ton
	#1 Crusher Run	Ton
	#2 Crushed Stone	Ton
	#2 Crusher Run	Ton
	#3 Crusher Run	Ton
	Crushed Stone Screenings	Ton
	#1 Washed Stone	Ton
	#1 Washed Crushed Stone	Ton
	#1A Stone	Ton
	3/8" Washed Stone	Ton
	#1A Washed Stone	Ton
	#1B Stone	Ton
	#1B Washed Stone	Ton
	#1 ST Washed Stone	Ton
	#2 Stone	Ton
	#2 Washed Stone	Ton
	#3 Stone	Ton
	#4 Stone	Ton
	#4A Stone	Ton
	#5 Stone	Ton
	Screened gravel	Ton or CY
	Stone Filling _ (Fine)	Ton
	Stone Filling – (Light)	Ton
	Stone Filling – (Medium)	Ton
	Stone Filling – (Heavy)	Ton
	Plant Mixing of Aggregates	CY

<u>BASIS OF AWARD:</u>

The County or a local municipal subdivision will select the vendor based upon the lowest total cost of the following elements:

1. Round trip distance (in miles) from the plant to the midpoint of the project multiplied by $0.40 per english ton of asphalt per mile.
2. Material cost.
3. The County reserves the right to select the vendor based on material quality and quantity for each given project.

ITEM _____ CONCRETE FOR STRUCTURES

DESCRIPTION:

Furnish and deliver Portland cement concrete material, as specified, F.O.B. to any point in Monroe County on 24 hour notice.

MATERIAL REQUIREMENT:

Material shall meet the requirements of the New York State Department of Transportation Standard Specifications, Section 500, latest revision, for Portland cement concrete material. The plant, equipment and materials shall be NYSDOT approved.

BASIS OF AWARD:

Award will based upon the lowest bid for each material type bid. The bid price shall include delivery and the 1st hour of on site waiting time.

A small load is defined as an order of less than 4 Cubic Yards.

Excess waiting time is defined as any on site waiting time in excess of 1 hour, and shall be paid at the bid price ($/minute).

METHOD OF MEASUREMENT:

The quantity of material to be paid for shall be measured by the cubic yard delivered.

The following options (if requested) will be paid at the following fixed unit prices as indicated in the award documents:

Item	Price
Heat	$10/CY
Small Load Charge	$65/Load
Retarder	$4/CY
High Early	$8/CY
DCI	$10/CY
Excess waiting time	$1/Min.

BASIS OF PAYMENT:

Payment will be made under:

Item No.	Item Description	Pay Unit
	Concrete for Structures Class A	CY
	Concrete for Structures Class D	CY

ITEM _____ CONCRETE GROUTING MATERIAL:

DESCRIPTION:

Furnish and deliver Portland cement concrete grouting material, F.O.B. to any point in Monroe County on 24 hour notice.

MATERIAL REQUIREMENT:

Material shall meet the requirements of the New York State Department of Transportation Standard Specifications, Section 701-05, Concrete Grouting Material, latest revision. The plant, equipment and materials shall be NYSDOT approved.

BASIS OF AWARD:

Award will based upon the lowest bid for each material type bid. The bid price shall include delivery and the 1st hour of on-site waiting time.

A small load is defined as an order of less than 4 Cubic Yards.

Excess waiting time is defined as any on site waiting time in excess of 1 hour, and shall be paid at the bid price ($/minute).

METHOD OF MEASUREMENT:

The quantity of material to be paid for shall be measured by the cubic yard delivered.

BASIS OF PAYMENT:

Payment will be made under:

Item No.	Item Description	Pay Unit
	Concrete Grouting Material	CY

ITEM _____ CONTROLLED LOW STRENGTH MATERIAL:

DESCRIPTION:

Furnish and deliver controlled low strength material, F.O.B. to any point in Monroe County on 24 hour notice.

MATERIAL REQUIREMENT:

Material shall meet the requirements of the New York State Department of Transportation Standard Specifications, Section 204, controlled low strength material, latest revision. The plant, equipment and materials shall be NYSDOT approved.

BASIS OF AWARD:

Award will based upon the lowest bid for each material type bid. The bid price shall include delivery and the 1st hour of on-site waiting time.

A small load is defined as an order of less than 4 Cubic Yards.

Excess waiting time is defined as any on site waiting time in excess of 1 hour, and shall be paid at the bid price ($/minute).

METHOD OF MEASUREMENT:

The quantity of material to be paid for shall be measured by the cubic yard delivered.

BASIS OF PAYMENT:

Payment will be made under:

Item No.	Item Description	Pay Unit
	Controlled Low Strength Material	CY

ITEM _____ FLOWABLE FILL (PURE WATERS BLEND)

DESCRIPTION:

The work shall consist of furnishing and placing a cementitious, flowable, low strength slurry backfill as shown on the plans or as directed by the Engineer, in writing, and in accordance with this Specification.

MATERIAL REQUIREMENT:

Portland Cement - Type I or II - ASTM C-150.

Water - Potable.

Fly Ash - Shall be tested for toxicity pursuant to a testing protocol approved by the New York State Department of Environmental Conservation (NYSDEC). The Engineer shall be provided with a copy of documentation issued by the supplier, confirming conformance with applicable NYSDEC rules and regulations. Fly Ash shall conform to the chemical and physical requirements for mineral admixture for Class F and/or Class C as listed in ASTM C-618, including Table2 (except footnote A). The loss of ignition shall be waived.

Crushed Glass Aggregate - Shall be used in flowable mixtures purchased by Monroe County Pure Waters. Flowable Fills using crushed glass aggregate shall typically contain 500 to 1000 lbs. (15% - 30% of total mixture by weight) of crushed glass aggregate. The maximum size of crushed glass aggregate shall be 100% passing the 3/8" sieve.

Chemical admixtures - Shall be liquid or in powdered form that are used for standard ready mixed concrete production unless specifically designed for a flowable fill (i.e. high air generators).

MONROE COUNTY PURE WATERS BLEND FOR FLOWABLE FILL WITH CRUSHED GLASS:

85# Portland Cement ASTM C-150.

1450# Fly Ash ASTM C-618 Class F (loss of ignition waived).

700# Crushed Glass processed by Monroe County Recycling Center and/or Monroe County Fleet Center

Compressive strength 50 - 150 PSI @ 28 days.

CONSTRUCTION DETAILS:

Prior to mixing any flowable fill back fill material, the Contractor shall submit to the Engineer, a mix design and laboratory test results or historical test data from previous projects using a

similar flowable fill mixture. Test results shall show source and type (or Class) of materials, batch proportions and conformance to the strength requirements.

All equipment for this work shall be subject to the approval of the Engineer at all times. The plant shall be either a continuous or batch type plant, designed to proportion either by weight or by volume, such that a uniform mix will result.

Prior to placement, the operator shall insure a thorough and uniform mix, by mixing at the plant or in transit.

If prepared at a continuous plant, the mix may be transported in open-top haul units when the material can be placed within 30 minutes at the completion of mixing. Material placed in excess of 30 minutes after the completion of mixing shall be transported in rotating drum type units capable of 2-6 rpm.

The method of placing the flowable fill shall be as approved by the Engineer.

The flowable fill shall be accepted on the basis of inspection and approval by the Engineer.

METHOD OF MEASUREMENT:

Award will based upon the lowest bid for each material type bid. The bid price shall include delivery and the 1st hour of on-site waiting time.

A small load is defined as an order of less than 4 Cubic Yards.

Excess waiting time is defined as any on site waiting time in excess of 1 hour, and shall be paid at the bid price ($/minute).

BASIS OF PAYMENT:

Payment will be made under:

Item No.	Item Description	Pay Unit
	Flowable Fill (Pure Waters Blend)	CY

ITEM _____TOPSOIL

DESCRIPTION:

Provide topsoil material at the vendor's pit or quarry F.O.B. utilizing County trucks.

MATERIAL REQUIREMENT:

Material shall meet the requirements of the New York State Department of Transportation Standard Specifications, Section 713-01, Topsoil, latest revision.

METHOD OF MEASUREMENT:

The quantity of material to be paid for shall be measured by the English Ton, where an approved scale is available. If an approved scale is not available, a cubic yard price will be accepted.

BASIS OF BID:

The county requests bids in for each material designated as follows:

Unit price bid shall include all costs of furnishing and loading the material F.O.B. County trucks at vendors pit or quarry.

A separate material hauling price per ton or cubic yard for vendor hauling will be bid and applied to the material in this specification.

BASIS OF PAYMENT:

Payment will be made under:

Item No.	Description	Pay Unit
	Topsoil - Screened	Ton
	Topsoil – Screened	CY
	Topsoil – Unscreened	Ton
	Topsoil – Unscreened	CY

BASIS OF AWARD:

Due to the variable locations and availability of topsoil throughout the construction season; The County or a local municipal subdivision will select the vendor based upon the closest location of the vendor material stockpile and the availability of dry, quality topsoil meeting the specifications and the quantity requirements of the project.

ITEM _____ FILL DIRT MATERIAL

DESCRIPTION:

Provide fill dirt material at the vendor's pit or quarry F.O.B. utilizing County trucks.

MATERIAL REQUIREMENT:

In general, this material will consist of mineral (inorganic) soil. Such soil shall not contain organic material or solids (stones) larger than 6 inches. Material shall be subject to the approval of the Associate Engineer – Highways.

METHOD OF MEASUREMENT:

The quantity of material to be paid for shall be measured by the English Ton, where an approved scale is available. If an approved scale is not available, a cubic yard price will be accepted.

BASIS OF BID:

The county requests bids for each material designated as follows:

Unit price bid shall include all costs of furnishing and loading the material F.O.B. County trucks at vendors pit or quarry.

A separate material hauling price per ton or cubic yard for vendor hauling will be bid and applied to the material in this specification.

BASIS OF PAYMENT:

Payment will be made under:

Item No.	Item Description	Pay Unit
	Fill Dirt Material	Ton
	Fill Dirt Material	CY

BASIS OF AWARD:

Due to the variable locations and availability of suitable fill material throughout the construction season; The County or a local municipal subdivision will select the vendor based upon the closest location of the vendor material stockpile and the availability of suitable fill material meeting the specifications and the quantity requirements of the project.

ITEM _____ COMPOST TOPSOIL

DESCRIPTION:

Provide compost topsoil at the vendor's pit or quarry F.O.B. utilizing County trucks.

MATERIAL REQUIREMENT:

Topsoil component ratios will vary according to the designated use of this mixture.

The following is an ideal mixture:
2 parts topsoil (sandy)
1 part organic material (compost)

The particle size of the sand should be consistently a medium sand with less than 15% fine sand or coarse sand.

The material shall meet the following criterion:

Particle Size:		%
Gravel	Greater than 3 mm	0
Fine Gravel	2 –3 mm	0
Very Coarse Sand	1 –2 mm	Max 10% above 1 mm
Coarse Sand	0.5 – 1 mm	Min 65% between 0.25 and 1 mm
Medium Sand	0.25 – 0.5 mm	Min 65% between 0.25 and 1 mm
Fine Sand	0.05 – 0.1 mm	Less than 25% below 0.25 mm
Very Fine Sand	0.05 – 0.1 mm	Less than 25% below 0.25 mm
Silt	0.002 – 0.05 mm	Less than 5%
Clay	Less than 0.002 mm	Less than 3%
Bulk Density	1.2 – 1.6 g/cm	
Porosity	Total 40 – 55% of water	Non-capillary minimum 15%
Infiltration Rate	4 – 10 in/hour @ 40 cm water	
pH	5.5 – 6.5	

Vendors, when submitting bids for this material, be sure to include the pH spec. Bulk density, porosity and infiltration rate specs may drive prices high. Specification may be relaxed to include a coarse sand but steer clear of fine sands, silts and clays as they tend to compact. A mixture of this quality will be a premium mix.

ITEM _____ COMPOST TOPSOIL

METHOD OF MEASUREMENT:

The quantity of material to be paid for shall be measured by the English Ton, where an approved scale is available. If an approved scale is not available, a cubic yard price will be accepted.

BASIS OF BID:

The county requests bids for each material designated as follows:

Unit price bid shall include all costs of furnishing and loading the material F.O.B. County trucks at vendor's location.

A separate material hauling price cubic yard for vendor hauling will be bid and applied to the material in this specification.

BASIS OF PAYMENT:

Payment will be made under:

Item No.	Item Description	Pay Unit
	Compost Topsoil	CY

BASIS OF AWARD:

Due to the variable locations and availability of topsoil throughout the construction season; The County or a local municipal subdivision will select the vendor based upon the closest location of the vendor material stockpile and the availability of dry, quality topsoil meeting the specifications and the quantity requirements of the project

ITEM _____ SELECT STRUCTURAL FILL MATERIAL:

DESCRIPTION:

Provide structural fill material at the vendor's plant F.O.B. utilizing County trucks.

MATERIAL REQUIREMENT:

Material shall meet the requirements of the New York State Department of Transportation Standard Specifications, Section 203, latest revision.

METHOD OF MEASUREMENT:

The quantity of material to be paid for shall be measured by the English Ton, where an approved scale is available. If an approved scale is not available, a cubic yard price will be accepted.

BASIS OF BID:

The county requests bids for each material designated as follows:

Unit price bid shall include all costs of furnishing and loading the material F.O.B. County trucks at vendors pit or quarry.

A separate material hauling price per ton or cubic yard for vendor hauling will be bid and applied to the material in this specification.

BASIS OF PAYMENT:

Payment will be made under:

Item No.	Item Description	Pay Unit
	Select Structural Fill	Ton
	Select Structural Fill	CY

BASIS OF AWARD:

The County or a local municipal subdivision will select the vendor based upon the lowest total cost of the following elements:

1. Round trip distance (in miles) from the asphalt plant to the midpoint of the project multiplied by $0.40 per english ton of asphalt per mile.
2. Material cost.
3. The County reserves the right to select the vendor based on material quality and quantity for each given project.

ITEM _____ SAND MATERIAL:

DESCRIPTION:

Provide sand material at the vendor's plant F.O.B. utilizing County trucks.

MATERIAL REQUIREMENT:

Material shall meet the requirements of the New York State Department of Transportation Standard Specifications, Sections 703-03, 04 & 07, latest revision, for mortar sand, grout sand and concrete sand. Abrasive A & B material shall meet the requirements of Group 33700 of the State of New York Executive Department, Office of General Services

Material #	Descriptive Title	Material Size Range & Miscellaneous Notes	Material Use
703-03	Mortar Sand	Concrete sand is a permited alternate	Fine sand for use in making mortor for masonary work
703-04	Grout Sand	#100 - #16	Fine sand for use in making grout
703-07	Concrete Sand	#200 - 3/8"	Sand for use in making Portland cement concrete
Abrasive A	Abrasive Gradation A	#200 - 3/8"	Abrasive used to treat snow and ice on pavements
Abrasive B	Abrasive Gradation B	#200 - 3/8"	Abrasive used to treat snow and ice on pavements

METHOD OF MEASUREMENT:

The quantity of material to be paid for shall be measured by the English Ton, where an approved scale is available. If an approved scale is not available, a cubic yard price will be accepted.

BASIS OF BID:

The county requests bids for each material designated as follows:

Unit price bid shall include all costs of furnishing and loading the material F.O.B. County trucks at vendors pit or quarry.

A separate material hauling price per ton for vendor hauling will be bid and applied to the material in this specification.

BASIS OF PAYMENT:

Payment will be made under:

Item No.	Item Description	Pay Unit
	Mortar Sand	Ton
	Grout Sand	Ton
	Concrete Sand	Ton
	Ice Control Sand	Ton

ITEM _____ SAND MATERIAL:

BASIS OF AWARD:

The County or a local municipal subdivision will select the vendor based upon the lowest total cost of the following elements:

1. Round trip distance (in miles) from the asphalt plant to the midpoint of the project multiplied by $0.40 per english ton of asphalt per mile.
2. Material cost.
3. The County reserves the right to select the vendor based on material quality and quantity for each given project.

ITEM _____ MASONRY ITEMS

DESCRIPTION:

Provide material F.O.B. to any point in Monroe County within 24 hours of receipt of order.

MATERIAL REQUIREMENT:

1. **Common Brick - Full Height**: Bid for common brick shall meet the requirements of NYSDOT Standard Specifications Section 704-01, latest revision. Dimensions will be 8" long, 4" wide, 2 2/3" high.

2. **Common Brick - Half Height**: Bid for common brick shall meet the requirements of NYSDOT Standard Specifications Section 704-01, latest revision. Dimensions will be 8" long, 4" wide, 1 1/3" high.

3. **Mortar Mix (Bagged)**: Bid shall be for 80 lb. bags Quikrete Mortar Mix.

4. **Concrete Mix (Bagged)**: Bid shall be for 80 lb. bags Quikrete Concrete Mix.

5. **Portland Cement (Bagged)**: Bid for Portland Cement shall meet the requirements of NYSDOT Standard Specifications Section 701-1, Type 2, latest revision. Price will be for 94 lb. bags.

6. **Black Beauty (Bagged)**: Bid shall be for 100 lb. bags of Sand Blasting Sand Type 1240 medium.

METHOD OF MEASUREMENT:

Material shall be measured for payment as follows:

#	ITEM	PAYMENT UNIT
1	Common Brick – Full Height	Each
2	Common Brick – Half Height	Each
3	Mortar Mix - 80 # Bag	Bags
4	Concrete Mix – 80 # Bag	Bags
5	Portland Cement – 94 # Bag	Bags
6	Black Beauty – 100 # Bag	Bags

ITEM _____ MASONRY ITEMS

BASIS OF BID:

The unit price bid for each item shall include all costs to furnish and deliver the material F.O.B. to any point in Monroe County within 24 hours of receipt of order.

Brick purchases are to be made in full cube / pallet increments only. Deliveries shall be made between 8:00 AM and 3:00 PM Monday through Friday. The per brick price is used only for the award.

The cost of a pallet is to be included in the cost of the commodity. No pallet rental charges or any other pallet charges will be allowed or accepted.

BASIS OF PAYMENT:

Payment will be made under:

Item No.	Description	Pay Unit
	Common Brick – Full Height	Each
	Common Brick – Half Height	Each
	Mortar Mix - 80 # Bag	Bag
	Concrete Mix – 80 # Bag	Bag
	Portland Cement - 94# Bag	Bag
	Black Beauty – 100 # Bag	Bag

ITEM _____ COMMON SEWER BRICK

DESCRIPTION:

This item shall include furnishing and delivery of common sewer brick F.O.B. to any point in Monroe County.

MATERIAL REQUIREMENT:

The composition of the bricks shall be first quality, sound, hand-burned, and standard size conforming to ASTM Standard C-32-69 Grade SS, ASTM C-216-71, Grade SW.

METHOD OF MEASUREMENT:

The unit price bid solicited is per each brick; pricing F.O.B. at any point in Monroe County.

The cost of a pallet is to be included in the cost of the commodity. No pallet rental charges or any other pallet charges will be allowed or accepted.

BASIS OF BID:

The unit price bid for each item shall include all costs to furnish and deliver the material F.O.B. to any point in Monroe County within 24 hours of receipt of order.

Purchases are to be made in full cube / pallet increments only. Deliveries shall be made between 8:00 AM and 3:00 PM Monday through Friday. The per brick price is used only for the award.

BASIS OF PAYMENT:

Payment will be made under:

Item No.	Description	Pay Unit
	Common Sewer Brick	EA

ITEM _____ PATIO PAVERS

DESCRIPTION:

Provide Patio Pavers F.O.B. to any point in Monroe County within 7 working days of order.

MATERIAL REQUIREMENT:

The Patio Pavers shall be 4" X 8" X 1½" Red Range Bantam Patio Pavers. Deliveries shall be made between 8:00 AM and 3:00 PM Monday through Friday.

METHOD OF MEASUREMENT:

Item will be 630 pavers to a pallet and delivered within 7 working days of order. Item shall be measured for payment per paver for each pallet delivered.

BASIS OF BID:

Bid should be per paver for unit F.O.B. any point in Monroe County.

The cost of a pallet is to be included in the cost of the commodity. No pallet rental charges or any other pallet charges will be allowed or accepted.

BASIS OF PAYMENT:

Payment will be made under:

Item No.	Description	Pay Unit
	Patio Pavers	Each

ITEM _____ DETECTABLE WARNING MATERIALS

DESCRIPTION:

Provide detectable warning materials F.O.B. to any point in Monroe County.

MATERIAL REQUIREMENT:

Material shall meet the requirements of the New York State Department of Transportation Standard Specifications, Section 608, latest revision, and appear on the NYSDOT current approved list (copy below) for the specific application.

PROVISIONALLY APPROVED SURFACE APPLIED DETECTABLE WARNINGS PRODUCT LIST

PRODUCT NAME	MANUFACTURER/LOCATION
Armor-Tile Surface Applied System	Engineered Plastics, Inc. Williamsville, NY 14221
DWS TILES	Troy Die Cutting Company Troy, NY 12180
SAFTI-TRAX	Cote-L Industries Teaneck, NJ 07666
STRONGWARN	Strongwall Industries, Inc. Ridgewood, NJ 07450
Tactile Warning Tile	ADA Solutions, Inc. North Billerica, MA 01862
Trelleborg's TGS (Tactile Guidance System)	Trelleborg Industri-AB Edison, NJ 08820

PROVISIONALLY APPROVED EMBEDDED PREFORMED DETECTABLE WARNINGS PRODUCT LIST

PRODUCT NAME	MANUFACTURER/LOCATION
ADA Pavers	Whitacre-Greer Alliance, Ohio 44601
Armor-Tile Cast-in-Place System	Engineered Plastics, Inc. Williamsville, NY 14221
Detecto-Tile	Detecto-Tile, Inc. Central Valley, NY 10917
Press in Place Paver Tile	ADA Solutions, Inc. North Billerica, MA 01862
STEP-Safe Precast Polymer Concrete	Transpo Industries New Rochelle, NY 10801
Provisionally Approved Detectable Warnings Paver Product List	
Oaks Detectable Warning Paver	Oaks Concrete Products Milton, Ontario
Hanover Detectable Warning Paver	Hanover Architectural Products Hanover, PA 17331

METHOD OF MEASUREMENT:

A. Surface Applied Detectable Warning material shall be measured for payment by the square foot.
B. Embedded Detectable Warning material shall be measured for payment by the square foot
C. Detectable Warning material paver bricks shall be measured for payment by the square foot

BASIS OF BID:

The unit price bid shall include all costs to furnish and deliver the material F.O.B. to any point in Monroe County.

The cost of a pallet is to be included in the cost of the commodity. No pallet rental charges or any other pallet charges will be allowed or accepted.

BASIS OF AWARD

Each vendor will supply pricing for the products which they can provide. A separate award will be made for each product. In the event that Bidders provide a bid price on the same product the award will be made to the lowest bidder.

BASIS OF PAYMENT:

Payment will be made under:

Item No.	Description	Pay Unit
	Surface Applied Detectable Warning Material	SF
	Embedded Preformed Detectable Warning Material	SF
	Detectable warning paver bricks	SF

ITEM_____ GRASS SEED – GENERAL MIX (HIGHWAY BLEND)

DESCRIPTION:

This item shall include providing grass seed to any point F.O.B. in Monroe County within 24 hours of order.

MATERIAL REQUIREMENT:

Material shall meet the requirements of the New York State Department of Transportation Standard Specifications, Section 713, latest revision. All seed shall be entophyte enhanced for disease resistance. All germination testing shall be no more than six months from the date of purchase.

Grass seed shall meet the requirements below:

NAME	% PER LB.
Fine Textured Perennial Rye	50%
Chewing Fescue	20%
Creeping Red Fescue	15%
Kentucky Blue Grass	15%
Weed seed shall not exceed	0.05%
Noxious seed shall not exceed	0.0%
Crop seed shall not exceed	0.0%
Inert matter shall not exceed	1.5%
Germination shall not be less than	90%

METHOD OF MEASUREMENT:

The quantity of material to be paid for will be measured by the 50 pound bag.

BASIS OF BID:

The unit price bid solicited is per 50 lb. bag F.O.B. at any point in Monroe County within 24 hours of order.

BASIS OF PAYMENT:

Payment will be made under:

Item No.	Description	Pay Unit
	Grass Seed – General Mix (Highway Blend)	50 Lb. Bag

ITEM _____ GRASS SEED - PREMIUM MIX (PURE WATERS BLEND)

DESCRIPTION:

This item shall include providing grass seed to any point F.O.B. in Monroe County within 24 hours of order.

MATERIAL REQUIREMENT:

Material shall meet the requirements of the New York State Department of Transportation Standard Specifications, Section 713, latest revision. All seed shall be entophyte enhanced for disease resistance. All germination testing shall be no more than six months from the date of purchase.

Grass seed shall meet the requirements below:

NAME	% PER LB.
Kentucky Bluegrass	40%
Fine Texture Perennial Rye	35%
Chewing Fescue	25%
Weed seed shall not exceed	0.05%
Noxious seed shall not exceed	0.0%
Crop seed shall not exceed	0.0%
Inert matter shall not exceed	1.5%
Germination shall not be less than	90%

METHOD OF MEASUREMENT:

The quantity of material to be paid for will be measured by the pound.

BASIS OF BID:

The unit price bid solicited is per 50 lb. bag F.O.B. at any point in Monroe County within 24 hours of order.

BASIS OF PAYMENT:

Payment will be made under:

Item No.	Description	Pay Unit
	Grass Seed – Premium Mix (Pure Waters Blend)	50 Lb. bag

ITEM_____ GRASS SEED – ANNUAL RYEGRASS

DESCRIPTION:

This item shall include providing grass seed to any point F.O.B. in Monroe County 24 hours of order.

MATERIAL REQUIREMENT:

Material shall meet the requirements of the New York State Department of Transportation Standard Specifications, Section 713, latest revision. All seed shall be entophyte enhanced for disease resistance. All germination testing shall be no more than six months from the date of purchase.

Grass seed shall meet the requirements below:

NAME	% PER LB.
Annual Ryegrass	100%

Weed seed shall not exceed	0.05%
Noxious seed shall not exceed	0.0%
Crop seed shall not exceed	0.0%
Inert matter shall not exceed	1.5%
Germination shall not be less than	90%

METHOD OF MEASUREMENT:

The quantity of material to be paid for will be measured by the 50 pound bag.

BASIS OF BID:

The unit price bid solicited is per 50 lb. bag F.O.B. at any point in Monroe County within 24 hours of order.

BASIS OF PAYMENT:

Payment will be made under:

Item No.	Description	Pay Unit
	Grass Seed – Annual Ryegrass	50 Lb. bag

ITEM_____ GRASS SEED – QUICK GROW / TRIPLE PERENIAL RYEGRASS MIX (MILL SEAT BLEND)

DESCRIPTION:

This item shall include providing grass seed to any point F.O.B. in Monroe County 24 hours of order.

MATERIAL REQUIREMENT:

Material shall meet the requirements of the New York State Department of Transportation Standard Specifications, Section 713, latest revision. All seed shall be entophyte enhanced for disease resistance. All germination testing shall be no more than six months from the date of purchase.

Grass seed shall meet the requirements below:

NAME	% PER LB.
Prelude II Perennial Ryegrass	33%
Elf Perennial Ryegrass	33%
Palmer II Perennial Ryegrass	33%
Weed seed shall not exceed	0.05%
Noxious seed shall not exceed	0.0%
Crop seed shall not exceed	0.0%
Inert matter shall not exceed	1.5%
Germination shall not be less than	90%

METHOD OF MEASUREMENT:

The quantity of material to be paid for will be measured by the 50 pound bag.

BASIS OF BID:

The unit price bid solicited is per 50 lb. bag F.O.B. at any point in Monroe County within 24 hours of order.

BASIS OF PAYMENT:

Payment will be made under:

Item No.	Description	Pay Unit
	Grass Seed – Quick Grow / Triple Perennial Ryegrass Mix (Mill Seat Blend)	50 Lb. bag

ITEM_____ HYDROSEED MULCH (CELLULOSE- PAPER)

DESCRIPTION:

This item shall include providing packaged bales of paper hydroseed mulch to any point F.O.B. in Monroe County within 24 hours of order.

MATERIAL REQUIREMENT:

Material shall meet the requirements of the New York State Department of Transportation Standard Specifications, Section 713, latest revision. The material shall be manufactured from recycled cellulose fibers and be 100% biodegradable, with a maximum moisture content of 14%. All mulch shall be free of all weed seeds, dyed in a dark green for easy metering, free of any growth inhibiting factors.

METHOD OF MEASUREMENT:

The quantity of material to be paid for will be measured by the pound.

BASIS OF BID:

The unit price bid solicited is per lb. F.O.B. at any point in Monroe County within 24 hours of order.

BASIS OF PAYMENT:

Payment will be made under:

Item No.	Description	Pay Unit
	HYDROSEED MULCH (CELLULOSE- PAPER)	Lb.

ITEM_____ HYDROSEED MULCH (WOOD AND CELLULOSE FIBER MIXTURE)

DESCRIPTION:

This item shall include providing packaged bales of a combination of wood and cellulose(paper) hydroseed mulch to any point F.O.B. in Monroe County within 24 hours of order.

MATERIAL REQUIREMENT:

Material shall meet the requirements of the New York State Department of Transportation Standard Specifications, Section 713, latest revision. The material shall be manufactured from recycled wood and cellulose fibers. The mixture shall contain 70% recycled wood fiber and 30% recycled paper products. The mixture shall be 100% biodegradable, with a maximum moisture content of 14%. All mulch shall be free of all weed seeds, dyed in a dark green for easy metering, free of any growth inhibiting factors.

METHOD OF MEASUREMENT:

The quantity of material to be paid for will be measured by the pound.

BASIS OF BID:

The unit price bid solicited is per Pound (lb.) F.O.B. at any point in Monroe County within 24 hours of order.

BASIS OF PAYMENT:

Payment will be made under:

Item No.	Description	Pay Unit
	HYDROSEED MULCH (WOOD AND CELLULOSE FIBER MIXTURE))	Lb.

ITEM_____ HYDROSEED TACKIFIERS

DESCRIPTION:

This item shall include providing packaged containers of hydroseed tackifiers to any point F.O.B. in Monroe County within 24 hours of order.

MATERIAL REQUIREMENT:

Material shall meet the requirements of the New York State Department of Transportation Standard Specifications, Section 713, latest revision. The material shall be non- asphaltic in nature and contain polyacrylamide (PAM) copolymers and hydro-colloid polymers. The material shall contain a concentrated green dye for easy metering.

METHOD OF MEASUREMENT:

The quantity of material to be paid for will be measured by the Pound (lb.)

BASIS OF BID:

The unit price bid solicited is per lb F.O.B. at any point in Monroe County within 24 hours of order.

BASIS OF PAYMENT:

Payment will be made under:

Item No.	Description	Pay Unit
	HYDROSEED TACKIFIER	Lb.

ITEM _____ TURF LINE ICE MELTER

DESCRIPTION:

Provide Turf Line Ice Melter material F.O.B. to any point in Monroe County.

MATERIAL REQUIREMENT:

Ice Melter is used on sidewalks, driveways, steps, and parking lots and will not harm grass, shrubs, trees, walks and driveways. It can be used on hard packed snow and ice. It can be used to prevent sleet and freezing rain from accumulating on surfaces.

Do not use on precast concrete products. Do not use on concrete less than two years old. If concrete is porous or in bad condition this product could cause surface damage.

CONTENTS:

Potassium Chloride	98.8%
Sodium Chloride	0.9%
Inert Ingredients	0.03%

METHOD OF MEASUREMENT:

Item shall be measured for payment by the 50 # bag. or by the pallet, a pallet shall be defined as 42 bags.

BASIS OF BID:

Unit price bid shall include all costs to furnish and deliver material F.O.B. to any point in Monroe County. Material shall be available at vendor's yard within 7 working days of order.

The cost of a pallet is to be included in the cost of the commodity. No pallet rental charges or any other pallet charges will be allowed or accepted.

BASIS OF PAYMENT:

Payment will be made under:

Item No.	Description	Pay Unit
	Turf Line Ice Melter	Bag
	Turf Line Ice Melter	Pallet

ITEM _____ SUPER 5000 CONCRETE MIX

DESCRIPTION:

Provide Super 5000 Concrete Mix**.**

MATERIAL REQUIREMENT:

Material shall be Super 5000 Concrete Mix by Pakmix, or approved equal. The material shall have a minimum compressive strength of 5000 psi @ 28 days.

METHOD OF MEASUREMENT:

Material shall be measured for payment by the 80 lb. bag.

BASIS OF BID:

The unit price bid solicited is for F.O.B. at any point in Monroe County and shall be available at supplier's yard within 24 hours of receipt of order.

BASIS OF PAYMENT:

Payment will be made under:

Item No.	Description	Pay Unit
	Super 5000 Concrete Mix	Bag

ITEM _____ SPEEDCRETE RED LINE FAST SETTING CONCRETE

DESCRIPTION:

Provide Speedcrete Red Line fast setting concrete mix.

MATERIAL REQUIREMENT:

This is a fast setting high strength concrete used for patching bridge decks manufactured by Tamms Industries Co. The following compressive strengths are required (ASTM C-109):

AGE	COMPRESSIVE STRENGTH
1 HOUR	150 PSI
24 HOURS	2,500 PSI
7 DAYS	4,300 PSI
14 DAYS	4,500 PSI
28 DAYS	5,000 PSI

METHOD OF MEASUREMENT:

The quantity of material to be paid for shall be measured by the 50 pound bag.

BASIS OF BID:

The unit price bid solicited is for F.O.B. at any point in Monroe County and shall be available at supplier's yard within 24 hours of receipt of order.

BASIS OF PAYMENT:

Payment will be made under:

Item No.	Description	Pay Unit
	Speedcrete Red Line Fast Setting Concrete	Bag

ITEM _____ SPEEDCRETE GREEN LINE

DESCRIPTION:

Provide Speedcrete Green Line fast setting semi-flowable concrete mix.

MATERIAL REQUIREMENT:

This is a fast setting, semi-flowable, high strength patching material requiring only potable water for mixing. GREEN LINE achieves initial set in 6 – 15 minutes, and final set within 20 minutes. Repaired areas may be opened to traffic in approximately one hour following the final set.

METHOD OF MEASUREMENT:

The quantity of material to be paid for shall be measured by the 50 pound bag.

BASIS OF BID:

The unit price bid solicited is for F.O.B. at any point in Monroe County and shall be available at supplier's yard within 24 hours of receipt of order. No material substitute will be accepted for this product.

BASIS OF PAYMENT:

Payment will be made under:

Item No.	Description	Pay Unit
	Speedcrete Green Line Concrete	Bag

ITEM _____ SPEEDCRETE BLUE LINE

DESCRIPTION:

Provide Speedcrete Blue Line fast setting concrete mix.

MATERIAL REQUIREMENT:

This is a fast setting micro concrete primarily intended for underwater concrete repairs with initial set obtained in 3-5 minutes, and final set in about one hour manufactured by Tamms Industries Co. The following compressive strengths are required:

- 24 hrs - 2000 psi
- 28 days - 5000 psi

METHOD OF MEASUREMENT:

The quantity of material to be paid for shall be measured by the 50 pound bag.

BASIS OF BID:

The unit price bid solicited is for F.O.B. at any point in Monroe County and shall be available at supplier's yard within 24 hours of receipt of order.

BASIS OF PAYMENT:

Payment will be made under:

Item No.	Description	Pay Unit
	Speedcrete Blue Line	Bag

ITEM _____PLASTIC SAFETY FENCING

DESCRIPTION:

Provide recycled plastic safety fencing material F.O.B. to any point in Monroe County.

MATERIAL REQUIREMENT:

Material shall be plastic netting made from UV stabilized high-density polyethylene. It shall be provided in 4 ft. X 50 ft. rolls. Weight shall be 38 lbs/roll. Color shall be orange. Porosity shall be 50%. Other characteristics shall be as follows:

Tensile Strength Yield	Horizontal 3190 psi	Vertical 3840 psi
Ultimate Tensile Strength	Horizontal 2200 psi	Vertical 2600 psi
Strength Elongated at Break	Horizontal 90%	Vertical 260%

Material supplied will be equal to above listing, any deviation must be noted in proposal section with bid price. Delivery will be within 14 days of order.

METHOD OF MEASUREMENT:

The material shall be measured for payment by the roll.

BASIS OF BID:

The unit price bid shall include all costs to furnish and deliver material F.O.B. to any point in Monroe County within 14 days of order.

BASIS OF PAYMENT:

Payment will be made under:

Item No.	Description	Pay Unit
	Recycled Plastic Safety Fencing	Roll

ITEM _____ POLYETHYLENE SNOW FENCE

DESCRIPTION:

Provide polyethylene snow fence material delivered to various locations within Monroe County.

MATERIAL REQUIREMENT:

Material shall be High-Density Polyethylene black, orange or forest green in color .

Roll width shall be 4' and roll length shall be 100'.

Mesh size shall be 1.25" (Horizontal) X 3.25" (Vertical).

Tensile Yield shall be 320 psi.

Ultimate Tensile Yield shall be 370 lbs/Ft.

Elongation @ Break Point 150%

METHOD OF MEASUREMENT:

The material shall be measured for payment by the roll.

BASIS OF BID:

Material supplied shall be ready for pickup or delivered within 14 days of order.

BASIS OF PAYMENT:

Payment will be made under:

Item No.	Description	Pay Unit
	Polyethylene Snow Fence	Roll

ITEM _____ TRAFFIC SIGN POSTS (SQUARE TUBING)

DESCRIPTION:

Provide traffic sign posts F.O.B. to any point in Monroe County.

MATERIAL REQUIREMENT:

The steel posts furnished under this specification shall conform to the standard specification for cold-rolled carbon steel sheets, commercial quality ASTM designation A-366.

The cross section of the post shall be a square tube formed of 12 gauge (.105 United States Standard gauge) steel, carefully rolled to size and welded in the corner.

Post shall be of one or more of the following sizes as called for on the purchase order:

Post Measurement	Gauge	Weight per Foot (pound)	*Hole Diameter	Post Length
1 3/4" X 1 3/4"	12	2.060	7/16"	10’
2" X2"	12	2.416	7/16"	10’
2 1/4" X 2 1/4"	12	2.773	7/16"	3’

***Holes spaced one inch on centers on all four sides for the entire length of the post.**

The furnished member shall be straight and shall have a smooth uniform finish. It shall be possible to telescope consecutive sizes of tubes freely with a minimum amount of play. All holes and cut off ends shall be free from burrs.

All posts shall be weather protected by galvanizing. Posts shall be formed from cold-rolled steel strip which has been zinc coated, commercial quality (1.25 oz.) conforming to ASTM Specifications A-93.

Material supplied will be equal to above listing; any deviation will be noted in proposal section with bid price. Delivery will be within 14 days of order.

PACKAGING & DELIVIERY:

The posts shall be securely steel banded in bundles of twenty-five (25) posts. Delivery of the materials shall be transported on a flatbed truck in order for the agency to unload the materials. The contractor shall be responsible for the unloading of all materials not transported in this manner.

METHOD OF MEASUREMENT:

The material shall be measured for payment by the post.

ITEM _____ TRAFFIC SIGN POSTS (SQUARE TUBING)

BASIS OF BID:

The unit price bid shall include all costs to furnish and deliver the material F.O.B. to any point in Monroe County.

BASIS OF PAYMENT:

Payment will be made under:

Description (Post Measurement)	**Pay Unit**
Traffic Sign Post (Square Tubing) 1 3/4" x 1 3/4" x 10’	Each
Traffic Sign Post (Square Tubing) 2" x 2" x 10’	Each
Traffic Sign Post (Square Tubing) 2 1/4" x 2 1/4" x 3’	Each

ITEM _____ GREEN CHANNEL POSTS

DESCRIPTION:
Provide Green Channel posts F.O.B. to any point in Monroe County.

MATERIAL REQUIREMENT:
The cross section of the steel posts shall be a flanged channel T bar type weighing 2 #/foot formed from 12 gauge (0.105 United States Standard gauge) steel. These posts shall be rolled from material meeting the mechanical properties of ASTM designation A499-64. The posts shall have 3/8" diameter holes at 1" center for the full length of each 10' post. The furnished member shall be straight and shall have a smooth uniform finish. All holes and cut off ends shall be free from burrs.
Post must be painted with all-weather resistant high quality dark green enamel.

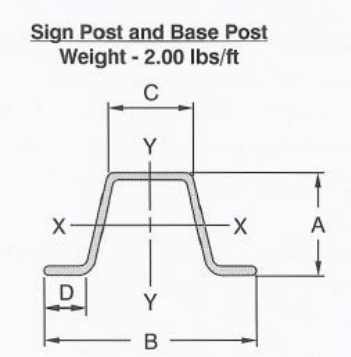

Flanged Channel Properties									
Weight	Dimensions				Area	X - X Axis +		Y - Y Axis	
*Lbs/Ft	"A"	"B"	"C"	"D"	IN^2	$I(IN^4)$	$S(IN^3)$	$I(IN^4)$	$S(IN^3)$
2.00	1.516	3.125	1.250	.625	.59	.18	.23	.42	.27

Material supplied will be equal to above listing; any deviation will be noted in proposal section with bid price. Delivery will be within 14 days of order.

PACKAGING & DELIVIERY:
The posts shall be securely steel banded in bundles of twenty-five (25) posts. Delivery of the materials shall be transported on a flatbed truck in order for the agency to unload the materials. The contractor shall be responsible for the unloading of all materials not transported in this manner.

METHOD OF MEASUREMENT:
The material shall be measured for payment by the post.

BASIS OF BID:
The unit price bid shall include all costs to furnish and deliver the material F.O.B. to any point in Monroe County.

BASIS OF PAYMENT:
Payment will be made under:

Item No.	Description	Pay Unit
	Green Channel Posts	Each

ITEM _____ ALUMINUM SIGN BLANKS

DESCRIPTION:

Provide Aluminum Sign Blanks F.O.B. to any point in Monroe County.

MATERIAL REQUIREMENT:

The sign blanks are to be made of 100% recycled aluminum, of sizes asked for. Blanks shall be commercially flat, free from oils, grease, dust, oxidation or any other substances. Blanks are to be ready for adhesion of NYS Specification Reflective Sign sheeting. These blanks are to be used in the fabrication of traffic signs.

Base Metal: 100%: Recycled Aluminum.

Thickness: .080 unless otherwise specified. Some blanks .063 will be required as noted.

Holes: All holes are to be punched 7/16'' diameter unless otherwise noted

Testing: The material shall meet the requirements of ASTM B449.

NOTE: The Aluminum Blanks shall be free of any Trade Marks, markings or logos. The First dimension is always horizontal unless otherwise noted. All blanks are to be manufactured per US Bureau of Public Roads Standards. Blanks shall have 1-1/2'' radius corners in accordance with the federal Manual on Uniform Traffic Control Devices (latest edition) and the federal Standard Highway Signs and Markings Book. Blanks are to be e- chemically treated to meet ASTM B449 specifications as pretreated for paint or reflective sheeting. Corners and holes are to be burr free. Shipment will be refused or returned at vender's expense in the event the above listed conditions are not met. Drawings provided.

METHOD OF MEASUREMENT:

The material shall be measured for payment by the Sign Blank.

BASIS OF BID:

The unit price bid shall include all costs to furnish and deliver the material F.O.B. to any point in Monroe County.

DELIVERIES:

Deliveries are to be F.O.B. destination as specified by purchase order. All deliveries must be completed within thirty (30) days after receipt of order. Blanks are to be shipped via covered flatbed truck for side off-loading. Vender must contact department representative, Jim Lorenzo or designee at least 24 hours in advance of all deliveries at (585) 753-7846. Deliveries will only be accepted after inspection and between the hours of 9:00 AM and 2:00 PM week days only.

SHIPPING:

All blanks are to be shipped on pallets with minimum 250pcs to maximum 500 pcs on each pallet. All pallets shall be 28'' wide with 3-1/2'' ground clearance. No pallet shall exceed 2000 lbs.

ITEM _____ ALUMINUM SIGN BLANKS

BASIS OF AWARD:

There will be one award for all the sign blanks. The bid will be awarded to the bidder with the lowest multiplier. Bidders shall only submit a single multiplier. Deletion or changes to items listed or scheduled unit prices will be cause for rejection of the bid.

The multiplier will be applied to each of the scheduled values for the award and contract pricing.

Unit Price*: The option multiplier price bid shall be applied to the scheduled payment item prices contained in the proposal.* ***Do not show percentages to show the multiplier.*** *Any bid showing percentages will be rejected.* ***The multiplier shall be submitted to 4 decimal places.*** *(example 0.xxxx or 1.xxxx)*

BASIS OF PAYMENT:

Payment will be made under:

Description	Thickness (inches)	Pay Unit
Aluminum Sign Blank – 12” X 18” (2 holes)	.063	Each
Aluminum Sign Blank – 8” X 24” (0 holes)	.063	Each
Aluminum Sign Blank – 8” X 24” (4 holes)	.063	Each
Aluminum Sign Blank - 8” X 30” (0 holes)	.063	Each
Aluminum Sign Blank - 8” X 30” (2 holes)	.063	Each
Aluminum Sign Blank - 8” X 30” (4 holes)	.063	Each
Aluminum Sign Blank – 30” Octagon (2 holes)	.080	Each
Aluminum Sign Blank – 36” Octagon (2 holes)	080	Each
Aluminum Sign Blank - 12” X 24” (2 holes)	.080	Each
Aluminum Sign Blank – 12” x 30” (2 holes)	.080	Each
Aluminum Sign Blank – 18” X 18” (4 holes)	.080	Each
Aluminum Sign Blank – 24” X 24” (4 holes)	.080	Each
Aluminum Sign Blank – 24” X 30” (2 holes)	.080	Each
Aluminum Sign Blank – 24” X 36” (2 holes)	.080	Each
Aluminum Sign Blank – 30” X 36” (4 holes)	.080	Each
Aluminum Sign Blank – 30” X 30” (4 holes)	.080	Each
Aluminum Sign Blank – 36” X 36” (4 holes)	.080	Each
Aluminum Sign Blank – 12” X 36” (4 holes)	.080	Each
Aluminum Sign Blank – 18” X 36” (4 holes)	.080	Each
Aluminum Sign Blank – 12” X 36” (0 holes)	.080	Each
Aluminum Sign Blank – 12” X 42” (0 holes)	.080	Each
Aluminum Sign Blank – 12” X 48” (0 holes)	.080	Each
Aluminum Sign Blank – 12” X 54” (0 holes)	.080	Each
Aluminum Sign Blank – 12” X 60” (0 holes)	.080	Each
Aluminum Sign Blank – 12” X 72” (0 holes)	.080	Each
Aluminum Sign Blank – 24” X 48” (6 holes)	.080	Each

ITEM _____ STEEL SNOW FENCE POSTS

DESCRIPTION:

Provide steel snow fence posts F.O.B. to any point in Monroe County.

MATERIAL REQUIREMENT:

Post will be T bar type with a weight of at least 1.7 lbs. per foot. Post must be painted and 6 feet in length. The spade shall be attached at least 12 in. from the bottom of the post.

Material supplied will be equal to above listing, any deviation will be noted in proposal section with bid price. Delivery will be within 14 days of order.

METHOD OF MEASUREMENT:

The material shall be measured for payment by the post.

BASIS OF BID:

The unit price bid shall include all costs to furnish and deliver the material F.O.B. to any point in Monroe County.

BASIS OF PAYMENT:

Payment will be made under:

Item No.	Description	Pay Unit
	Steel Snow Fence Posts	Each

ITEM _____ CALCIUM CHLORIDE

DESCRIPTION:

This item shall consist of furnishing and delivering bags of calcium chloride to any point in Monroe County.

MATERIAL REQUIREMENT:

Material shall meet the requirements of the New York State Department of Transportation Standard Specifications, Section 712.02, latest revision.

METHOD OF MEASUREMENT:

The material shall be measured for payment by the pound as supplied in 50 # bags.

BASIS OF BID:

The unit price bid shall include all costs to furnish and deliver the material F.O.B. to any point in Monroe County.

BASIS OF PAYMENT:

Payment will be made under:

Item No.	Description	Pay Unit
	Calcium Chloride	50 # bags

ITEM _____ GEOTEXTILE BEDDING FABRIC

DESCRIPTION:

Provide geotextile erosion control fabric material for bedding F.O.B. to any point in Monroe County.

MATERIAL REQUIREMENT:

Material shall meet the requirements of the New York State Department of Transportation Standard Specifications, Section 207, Item 207.10 Geotextile Bedding, latest revision. The material shall appear on the NYSDOT Materials Approved List of Geosynthetics for Highway Construction.

Unless otherwise specified, the material strength classification requested shall be Strength Class 1 as noted on the aforementioned Approved List. In addition, 200 – 6" metal Indian Valley (or approved equal) staples shall be supplied with every roll (900 sf) of fabric provided.

METHOD OF MEASUREMENT:

The material shall be measured for payment by the square foot provided.

BASIS OF BID:

The unit price bid per square foot shall include all costs to furnish and deliver the material F.O.B to any point in Monroe County within 24 hours. The bidder shall specify the product name that is intended to be supplied.

A separate award will be made for each product which meets the specification.

BASIS OF PAYMENT:

Payment will be made under:

Item No.	Description	Pay Unit
	Geotextile Bedding Fabric	SF

ITEM _____ GEOTEXTILE UNDERCUT SEPARATION FABRIC

DESCRIPTION:

Provide geotextile undercut separation fabric material F.O.B. to any point in Monroe County.

MATERIAL REQUIREMENT:

Material shall meet the requirements of the New York State Department of Transportation Standard Specifications, Section 207, Item 207.11 Geotextile Separation, latest revision. The material shall appear on the NYSDOT Materials Approved List of Geosynthetics for Highway Construction.

Unless otherwise specified, the material strength classification requested shall be Strength Class 2 as noted on the aforementioned Approved List.

METHOD OF MEASUREMENT:

The material shall be measured for payment by the square foot provided.

BASIS OF BID:

The unit price bid per square foot shall include all costs to furnish and deliver the material F.O.B to any point in Monroe County within 24 hours. The bidder shall specify the product name that is intended to be supplied.

A separate award will be made for each product which meets the specification

BASIS OF PAYMENT:

Payment will be made under:

Item No.	Description	Pay Unit
	Geotextile Undercut Separation Fabric	SF

ITEM _____ BIAXIAL GEOGRID BASE REINFORCEMENT MATERIAL

DESCRIPTION:

Provide a Biaxial Geogrid Base material composed of high strength polypropylene geogrid material. The product shall be capable of improving the distribution of applied loads and prevent localized shear failure. F.O.B. to any point in Monroe County.

MATERIAL REQUIREMENT:

Geogrid base reinforcement shall be a stiff, structural polypropylene biaxial geogrid similar to Carthage Mills Tenaz MS-220 or Tensar BX 1100 or equivalent.

The material shall conform to the following property requirements.

PROPERTY	TEST METHOD	UNITS	REQUIREMENTS
Interlock			
Aperture Size[1]	I.D. Callipered		
MD		in	1.0-1.7
TD		in	1.3-1.2
Open Area	COE Method[2]	%	70 (min)
Thickness	ASTM D1777-64		
Ribs		in	0.034 (nom)
Junctions		in	0.11 (nom)
Reinforcement			
Flexural Rigidity	ASTM D1388-64[3]	Mg-cm	250,000
Ultimate Strength	GRI GG1-87[4]		
MD		lb/ft	800-900
TD		lb/ft	1400
Tensile Modulus @2%	GRI GG1-87[4]	lb/ft	15,000 (MD) 22,269 (TD)
Tensile Modulus @5%	GRI GG1-87[4]	lb/ft	12,330(MD) 17800 (TD)
Junctions Strength; MD	GRI GG2-87[4]	lb/ft	750-850
Material			
Polypropylene	ASTM D 4101 Group 1/Class 1/Grade 2	%	98 (min)
Carbon Black	ASTM 4218	%	0.5 (min)

1. MD and TD correspond to the dimensions along roll length and roll width, respectively
2. Corps of Engineers method per CW 02215 Civil Works Construction Guide, November 1977
3. Modify method to account for wide specimen testing
4. GeoSynthetic Research Institute test method.

ITEM _____ BIAXIAL GEOGRID BASE REINFORCEMENT MATERIAL

METHOD OF MEASUREMENT:

The material shall be measured for payment by the square foot provided.

BASIS OF BID:

The unit price bid per square foot shall include all costs to furnish and deliver the material F.O.B to any point in Monroe County within 24 hours. The bidder shall specify the product name that is intended to be supplied.

A separate award will be made for each product which meets the specification.

BASIS OF PAYMENT:

Payment will be made under:

Item No.	Description	Pay Unit
	Geogrid Base Reinforcement Material	SF

ITEM _____ GEOTEXTILE DRAINAGE FABRIC

DESCRIPTION:

Provide geotextile filter fabric material for drainage F.O.B. to any point in Monroe County.

MATERIAL REQUIREMENT:

Material shall meet the requirements of the New York State Department of Transportation Standard Specifications, Section 207, Item 207.12 Geotextile Drainage, latest revision. The material shall appear on the NYSDOT Materials Approved List of Geosynthetics for Highway Construction.

Unless otherwise specified, the material strength classification requested shall be Strength Class 2 as noted on the aforementioned Approved List.

METHOD OF MEASUREMENT:

The material shall be measured for payment by the square foot provided.

BASIS OF BID:

The unit price bid per square foot shall include all costs to furnish and deliver the material F.O.B to any point in Monroe County. The bidder shall specify the product name that is intended to be supplied.

A separate award will be made for each product which meets the specification

BASIS OF PAYMENT:

Payment will be made under:

Item No.	Description	Pay Unit
	Geotextile Drainage Fabric	SF

ITEM _____ EROSION CONTROL SILT FENCE

DESCRIPTION:

Provide erosion control silt fence material F.O.B. to any point in Monroe County.

MATERIAL REQUIREMENT:

Material shall meet the requirements of the New York State Department of Transportation Standard Specifications, Section 209, Item 209.13 Temporary Silt Fence, latest revision. The material shall appear on the NYSDOT Materials Approved List of Geosynthetics for Highway Construction, and shall include pre-assembled hardwood stakes at a minimum 4' on center.

METHOD OF MEASUREMENT:

The material shall be measured for payment by the linear foot of 3-foot high silt fence provided.

BASIS OF BID:

The unit price bid per linear foot shall include all costs to furnish and deliver the material F.O.B to any point in Monroe County. The bidder shall specify the product name that is intended to be supplied.

A separate award will be made for each product which meets the specification.

BASIS OF PAYMENT:

Payment will be made under:

Item No.	Description	Pay Unit
	Erosion Control Silt Fence	LF

ITEM _____ TURBIDITY CURTAIN

DESCRIPTION:

Provide turbidity curtain F.O.B. to any point in Monroe County within 24 hours of order.

MATERIAL REQUIREMENT:

Material shall meet the requirements of the New York State Department of Transportation Standard Specifications, Section 209, Item 209.15, latest revision. The material shall appear on the NYSDOT Materials Approved List of Geosynthetics for Highway Construction.

METHOD OF MEASUREMENT:

The material will be measured for payment by the square foot

BASIS OF BID:

The unit price bid per square foot shall include all costs to furnish and deliver the material F.O.B to any point in Monroe County within 24 hours. The bidder shall specify the product name that is intended to be supplied.

A separate award will be made for each product which meets the specification

BASIS OF PAYMENT:

Payment will be made under:

Item No.	Description	Pay Unit
	Turbidity Curtain	SF

ITEM _____ SEDIMENT FILTRATION MAT

DESCRIPTION:

Provide erosion control sediment filtration material F.O.B. to any point in Monroe County.

MATERIAL REQUIREMENT:

Material shall meet the requirements of the IVI Sedimat, or approved equal, suitable for filtering sediment-laden stream flows.

METHOD OF MEASUREMENT:

The material shall be measured for payment by the square foot of material provided.

BASIS OF BID:

The unit price bid per square foot shall include all costs to furnish and deliver the material F.O.B to any point in Monroe County with 24 hours. The bidder shall specify the product name that is intended to be supplied.

A separate award will be made for each product which meets the specification

BASIS OF PAYMENT:

Payment will be made under:

Item No.	Description	Pay Unit
	Sediment Filtration Mat	SF

ITEM _____ SILT FILTRATION BAG

DESCRIPTION:

Provide erosion control silt filtration bag units F.O.B. to any point in Monroe County.

MATERIAL REQUIREMENT:

Material shall meet the requirements of the IVI Silt Filtration Bag, or approved equal, capable of filtering pumped water discharged from a 4" to 6" hose.

METHOD OF MEASUREMENT:

The material shall be measured for payment by the quantity of units provided.

BASIS OF BID:

The unit price bid per each shall include all costs to furnish and deliver the material F.O.B to any point in Monroe County. The bidder shall specify the product name that is intended to be supplied.

A separate award will be made for each product which meets the specification

BASIS OF PAYMENT:

Payment will be made under:

Item No.	Description	Pay Unit
	Silt Filtration Bag	EA

ITEM _____ GEOTEXTILE SLOPE PROTECTION - TEMPORARY

DESCRIPTION:

Provide geotextile slope protection material F.O.B. to any point in Monroe County.

MATERIAL REQUIREMENT:

Material shall meet the requirements of the New York State Department of Transportation Standard Specifications, Section 207, Item 207.13 Geotextile Slope Protection, latest revision. The material shall appear on the NYSDOT Materials Approved List of either Geosynthetics for Highway Construction or Erosion Control Products.

Unless otherwise specified, the material strength classification requested shall be Strength Class 3 as noted on the aforementioned Approved Lists.

METHOD OF MEASUREMENT:

The material shall be measured for payment by the square foot provided.

BASIS OF BID:

The unit price bid per square foot shall include all costs to furnish and deliver the material F.O.B to any point in Monroe County. The bidder shall specify the product name that is intended to be supplied.

A separate award will be made for each product which meets the specification.

BASIS OF PAYMENT:

Payment will be made under:

Item No.	Description	Pay Unit
	Geotextile Slope Protection - Temporary	SF

ITEM _____ GEOTEXTILE SLOPE PROTECTION - PERMANENT

DESCRIPTION:

Provide geotextile slope protection material F.O.B. to any point in Monroe County.

MATERIAL REQUIREMENT:

Material shall meet the requirements of the New York State Department of Transportation Standard Specifications, Section 207, Item 207.13 Geotextile Slope Protection, latest revision. The material shall appear on the NYSDOT Materials Approved List of Geosynthetics for Highway Construction.

Unless otherwise specified, the material strength classification requested shall be Strength Class 1 as noted on the aforementioned Approved List.

METHOD OF MEASUREMENT:

The material shall be measured for payment by the square foot provided.

BASIS OF BID:

The unit price bid per square foot shall include all costs to furnish and deliver the material F.O.B to any point in Monroe County. The bidder shall specify the product name that is intended to be supplied.

A separate award will be made for each product which meets the specification

BASIS OF PAYMENT:

Payment will be made under:

Item No.	Description	Pay Unit
	Geotextile Slope Protection - Permanent	SF

ITEM _____ CENTERLINE DELINEATORS

DESCRIPTION:

The following spec is for temporary chip seal markers made by Apex Universal Inc. or approved equal.

MATERIAL REQUIREMENT:

The markers body shall be made of yellow polyurethane. The vertical section shall be two inches high and four inches wide. The vertical section shall have reflective tape on both sides with a minimum reflectance of 1800 candle power per foot-candle per square foot at one tenth observation and zero entrance angle. The reflective tape shall be fully protected from oil and dirt by a sealed clear plastic removable cover. The base shall have a factory applied solid butyl rubber adhesive for bonding the marker to pavement. The adhesive shall be 1/8 " thick, 3/4" wide, 4" long and shall be protected by a release paper.

Packaging

They units shall be delivered in boxes or multiple boxes with a quantity of 500 in each box.

BASIS OF BID:

The basis of bid shall be a box quantity totaling 500 units. The bid price should include delivery of each box to any point in Monroe County.

BASIS OF PAYMENT:

Payment will be made under:

Item No.	Item Description	Pay Unit
	Centerline Delineators (500 ct)	Box

ITEM _____ SPEEDCRETE 2028

DESCRIPTION:

Provide SPEEDCRETE2028 material.

MATERIAL REQUIREMENT:

This is a material used for making concrete repairs and shall be Set-45 Concrete, as manufactured by Master Builders or approved equal. Setting time @ 95 deg. F. should be:

- initial - 10 to 15 minutes
- final - 12 to 20 minutes

METHOD OF MEASUREMENT:

The quantity of material to be paid for shall be measured by the 50 pound bag.

BASIS OF BID:

The material shall be available at supplier's yard within 24 hours of receipt of order.

The unit price bid solicited is for F.O.B. at any point in Monroe County within twenty-four hours of receipt of order. No substitute material will be accepted.

BASIS OF PAYMENT:

Payment will be made under:

Item No.	Description	Pay Unit
	SPEEDCRETE2028	Bag

ITEM _____ BITUTHENE 4000 MEMBRANE WATERPROOFING

DESCRIPTION:

This item shall consist of furnishing and delivering Bituthene 4000 membrane waterproofing or approved equal to any point in Monroe County.

MATERIAL REQUIREMENT:

Material shall be Bituthene System 4000 Waterproofing Membrane as manufactured by W. R. Grace or approved equal.

METHOD OF MEASUREMENT:

The material shall be measured for payment by the square foot, as provided in 3’ X 60’ rolls.

BASIS OF BID:

The unit price bid shall include all costs to furnish and deliver the material F.O.B. to any point in Monroe County. The material shall be available at supplier's yard within 24 hours of receipt of order.

BASIS OF PAYMENT:

Payment will be made under:

Item No.	Description	Pay Unit
	Bituthene System 4000 Waterproofing Membrane Or approved equal	SF

ITEM _____ BITUTHENE P-3000 PRIMER

DESCRIPTION:

Provide Bituthene P-3000 Primer or approved equal F.O.B. to any point in Monroe County.

MATERIAL REQUIREMENT:

Material shall be Bituthene P-3000 Primer as manufactured by W. R. Grace, and be compatible with Bituthene System 4000 Waterproofing Membrane or approved equal. The material shall be provided in 5 gallon containers.

METHOD OF MEASUREMENT:

The material will be measured for payment by the gallon.

BASIS OF BID:

The unit price bid shall include all costs to furnish and deliver the material F.O.B. to any point in Monroe County. The material shall be available at supplier's yard within 24 hours of receipt of order.

BASIS OF PAYMENT:

Payment will be made under:

Item No.	Description	Pay Unit
	Bituthene P-3000 Primer or approved equal	Gallon

ITEM _____ WOVEN POLYETHYLENE NYLON SHEETS

DESCRIPTION:

Provide woven nylon reinforced polyethylene sheets.

MATERIAL REQUIREMENT:

This material shall be heavy duty 6 mil thickness.

METHOD OF MEASUREMENT:

The quantity of material shall be measured and supplied in rolls of 20' x 100'.or 40’x100’.

BASIS OF BID:

The unit price bid solicited is for F.O.B. at any point in Monroe County. The material shall be available at supplier's yard within 24 hours of receipt of order.

BASIS OF PAYMENT:

Payment will be made under:

Item No.	Description	Pay Unit
	Woven Polyethylene Sheets(20’ x 100’)	Roll
	Woven Polyethylene Sheets(40’ x 100’)	Roll

Pivoted Turnbuckle Manhole Riser

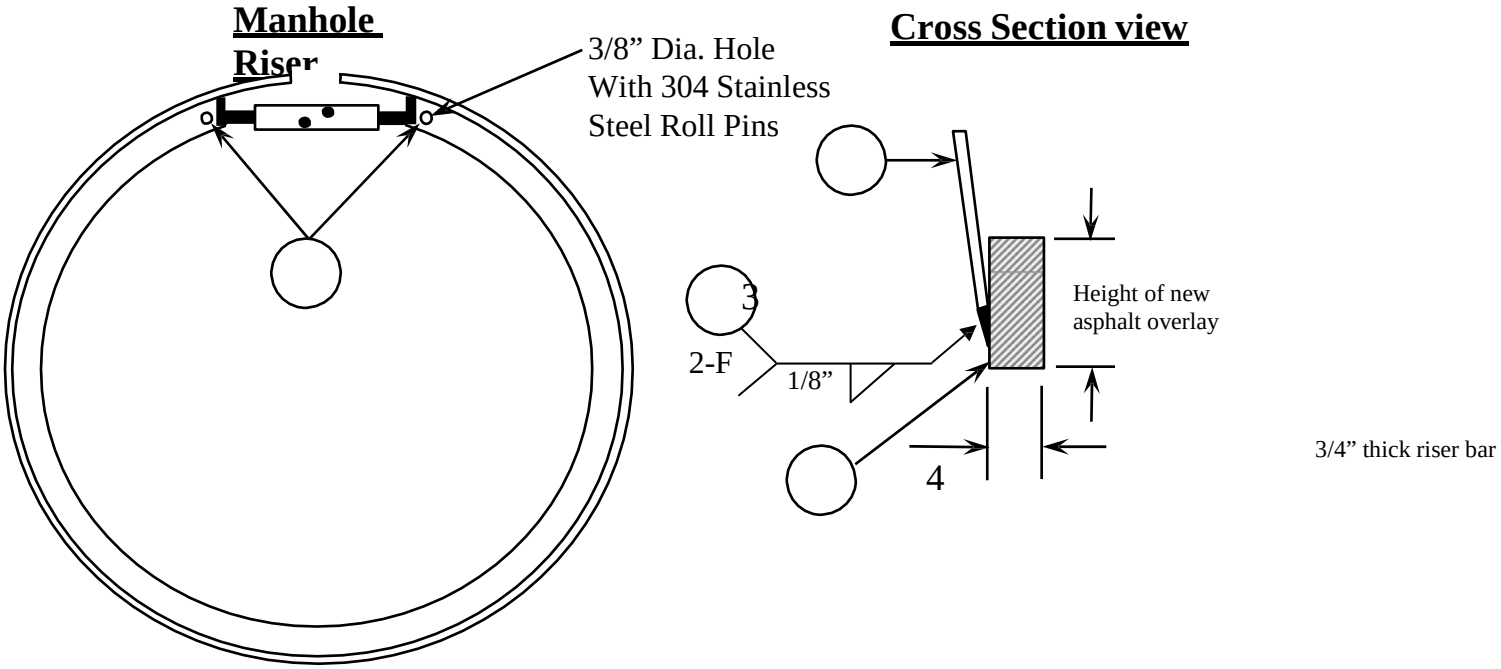

Pivoted Turnbuckle Expanding Linkage

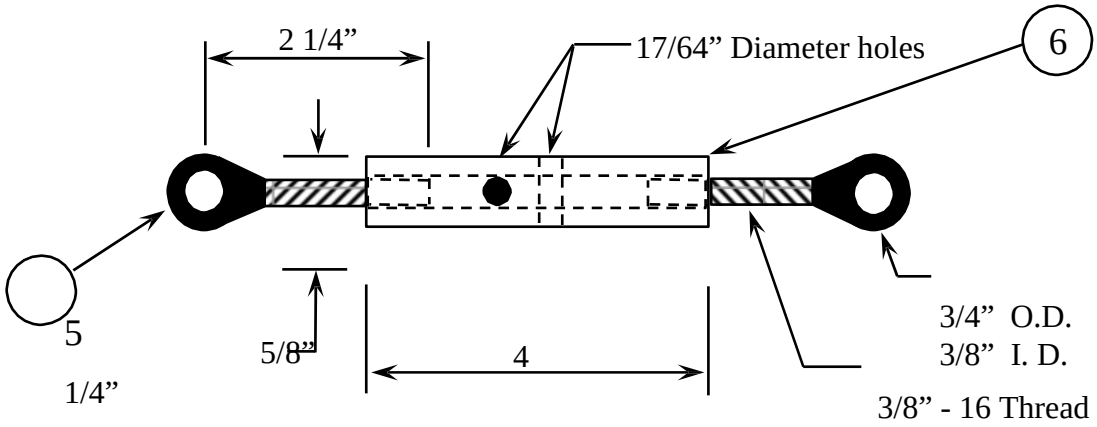

Item Number	Item Description	Material Description	Tensile Yield	Tensile Ultimate
1	3/8“ Roll Pins	304 Stainless Steel (14,000 LB Double Sheer Strength)		
2	Steel Skirt	12 or 10 gage A.I.S.I. 1020 Steel (A-36) G-90 Galvanized	33,000 P.S.I.	60,000 P.S.I.
3	Weld	Full circumference welded except on clamp area Lincoln Electric .045 71M Elite Outer Shield Flux Cored	75,000 P.S.I.	85,000 P.S.I.
4	3/4” wide Riser Bar	Hot Rolled Steel A.I.S.I. 1020 (A-36)	33,000 P.S.I.	60,000 P.S.I.
5	Rod Ends	Forging A.I.S.I. C-1030 Steel Heat Treated BHN 240 Zinc Plated with Dichromate Finish	70,000 P.S.I.	92,000 P.S.I.
6	Turnbuckle	A.I.S.I. 12L14 Steel Cold Drawn Zinc Plated with Yellow Dichromate Finish dipped in Linebacker rust inhibitor	60,200 P.S.I.	78,300 P.S.I.

ITEM _____PREFABRICATED STEEL ADJUSTMENT RINGS FOR MANHOLES:

MATERIAL REQUIREMENTS

The material specifications shall conform with Section 604-2.04 of the New York State Specifications, where applicable, to supply A –36 steel Manhole Adjustment Rings (Heavy Duty) or approved equal.

See Attached the detail

UNIT PRICE BID

The unit price bid shall be for each, including all costs of furnishing and delivering the material to any point in Monroe County for the quantity of units as specified.

DELIVERY

F.O.B. any point in Monroe County within 30 days of receipt of order.

BASIS OF PAYMENT:

Payment will be made under:

Item No.	Description	Pay Unit
	Prefabricated Steel Adjustment Rings	Each

ITEM POLYETHYLENE PIPE PRODUCTS BY ADVANCED DRAINAGE SYSTEM (ADS)

SCOPE

This specification covers the material and quality requirements for furnishing and delivery of polyethylene fittings manufactured by Advanced Drainage System.

MATERIAL REQUIREMENTS

The material shall meet the requirements of NYSDOT Standard Specifications Section 706 latest revision.

BASIS OF BID:

The unit bid price shall be for any requested amount of polyethylene fittings needed during the contract period delivered; including all delivery costs to anywhere in Monroe County within 14 days.

Bid prices will be requested for saddle T's, snap T's and adapters to be available at each unit cost.

Delivery

All requested fittings shall to be delivered within 14 days of the order, with deliveries scheduled to arrive at point of destination between the hours of 8:00 A.M. and 3:00 P.M., Monday through Friday excluding holidays.

Basis of Award

The award will be based on the price bid for each size fitting .

ITEM _____PVC DRAIN BASINS AND COMPONENTS

DESCRIPTION

Provide PVC drain basin and components F.O.B. to any point in Monroe County.

MATERIAL REQUIREMENTS

The material requirements for the Drain Basin shall be manufactured from PVC pipe stock meeting SDR 35, utilizing a thermomolding process to reform the pipe stock to the finished configuration. The drainage pipe connections stubs shall be manufactured from PVC pipe stock and formed to provide a watertight connection with the piping system. The basin to be available with 12" and 6" adapters for connection with 12" and 6" corrugated polyethylene pipe (smooth bore or tubing) (to be specified at the time of order). The drain basin shall be as manufactured by Nyloplast USA, Inc. or approved equal. The 12" grate shall be made of cast iron and capable of supporting a H-20 loading with the standard grate. Metal used in the manufacture of the casting shall conform to ASTM A-48 Class 30B for cast iron. The casting shall be furnished with a black paint. Drain basin shall conform to the attached detail.

UNIT PRICE BID

The unit price bid shall be for each unit, including all cost of furnishing and delivering the unit F.O.B. to any point in Monroe County within 14 days of receipt of order.

BASIS OF PAYMENT:

Payment will be made under:

Item No.	Description	Pay Unit
	12” PVC Drain Basin	Each
	12” Cast Iron Frame and Hinged Grate	Each
	12” PVC Drain Basin and Cast Iron Frame and Hinged Grate	Each

ITEM _____ORGANIC SNOW AND ICE CONTROL PRODUCTS

DESCRIPTION:

It shall be the purpose and intent of this award to make available to end users a variety of snow/ice control agents available in the marketplace and suitable for their intended use.

Products available under this award are required to meet the specifications and requirements contained herein. Users should note that the products offered by various vendors under this award are not identical. Like other commodities each offered product will have its own unique set of properties. They may vary in many areas including color, composition, and performance and cost to name a few. It is therefore incumbent on the users of these materials to attempt to select a cost effective products that best suits the circumstances of usage anticipated.

The vendors of these materials are a valuable resource of technical assistance and information regarding the products they offer. End users of this award are strongly encouraged to contact the various vendors of these materials and request technical advice and information to aid in selection of appropriate product, proper usage of that product and/or resolution of any problems encountered during usage.

MATERIAL REQUIREMENT:

The material shall be suitable for stockpile treatment of salt with a de-icing liquid comprised of organic based performance enhancer by itself or a blend of OBPE with a chloride brine as indicated on the bid sheet. The deicing materials when mixed with rock salt or a combination of rock salt and sand shall demonstrate the following benefits;

- Enhance the melting capabilities of rock salt down to 0 degrees F. when used by itself or with an onboard pre-wetting liquid.
- Reduce bounce and scatter of the granular products to be applied to the road surface.
- Demonstrate a residual effect on the applied road surface.
- The OBPE shall have a corrosion value less than that of distilled water.
- In addition the material shall meet the following general chemical requirements.

GENERAL CHEMICAL REQUIREMENTS:

Note Well: This section applies only to products offered that **do not** have a Beneficial Use Determination (BUD) from New York State Department of Environmental Conservation. **HOWEVER, ALL PRODUCTS OFFERED MUST CONTAIN 250 PPM OR LESS PHOSPHORUS, CALCULATED ON AN UNDILUTED BASIS, WITH OR WITHOUT BENEFICIAL USE DETERMINATION.**

Bids may not be accepted on any product that contains constituents in excess of the following established total concentration limits. Results are stated as Parts Per Million (ppm). If product exceeds any of the following constituents then the bidder shall identify the exception(s) and explain any mitigating circumstances. The State reserves the right to evaluate these exceptions and make a determination of product eligibility based on the best interests of the State.

Phosphorus 250.00 ppm	Chromium 0.50 ppm
Cyanide 0.20 ppm	Cadmium 0.20 ppm
Arsenic 5.00 ppm	Barium 75.00 ppm
Copper 0.50 ppm	Selenium 5.00 ppm
Lead 1.00 ppm	Zinc 10.00 ppm
Mercury 0.05 ppm	

Chemical Analysis

Bidder shall supply a certified analysis conducted within the last 3 years from an independent laboratory showing compliance with all the above listed requirements **INCLUDING** those listed in the GENERAL CHEMICAL REQUIREMENT section above. Exceptions to the requirements must be stated and the State reserves the right to reject the product.

EQUIPMENT REQUIREMENT

When the price per gallon includes the mixing (Option B) the vendor shall deliver the necessary pug mill mixing equipment plant to the purchasing agents site, the mixing equipment shall be supplied with adjustable liquid flow controls and a qualified operator trained by the vendor. The pugmill shall be capable of receiving different blends of aggregates and salt to produce a homogeneous blend of aggregates, salt, and liquid as desired by the purchasing agency. The purchasing agency will provide the loader and operators to assist in the mixing process to obtain optimal mixing production.

METHOD OF MEASUREMENT:

The quantity of material to be paid for shall be by the gallon for either Option A or Option B.

BASIS OF BID:

The county requests bids in for each material designated as follows:

The unit price bid per gallon for Option A shall include all costs of furnishing and delivering the material to any point in Monroe County

ITEM _____ORGANIC SNOW AND ICE CONTROL PRODUCTS

The unit price per gallon for Option B shall include all costs for the vendor furnishing, delivering the material and mixing (w/portable pugmill) the material with agency salt and aggregate at the agency storage facility.

BASIS OF PAYMENT:

Payment will be made under:

Item No.	Description	Pay Unit
	Organic Snow and Ice control liquid (Option A- delivered)	Gallon
	Organic Snow and Ice control liquid (Option B delivered and mixed at agency storage facility)	Gallon

ASPHALT PRICE ADJUSTMENT APPENDIX

Description

Price adjustments allowed will be based on the **September 1, 2015 average** of the F.O.B. terminal price per English ton of unmodified PG 64-22 binder without anti-stripping agent (base average F.O.B. terminal price). The new monthly average terminal price will be determined by the New York State Department of Transportation based on prices of preapproved primary sources of performance graded binder in accordance with the New York State Department of Transportation Standard Specification.

The **September 1, 2015** average terminal price is **$521/Ton**

NOTE: The same grade of asphalt cement used in establishing the base average F.O.B. terminal price shall be used in establishing the new average F.O.B. terminal price.

In the event that one or more of the New York State Department of Transportation preapproved sources discontinue posting a price for asphalt cement, the base average F.O.B. terminal **price shall not be recalculated.**

2. Price adjustments will be in accordance with the formula below and will be effective for deliveries made on and after the first of the month.

3. The **unit prices per english ton of bituminous concrete material** purchased from any award based on this specification will be subject to adjustment based on the following formula:

Price Adjustment (per ton) Asphalt	=	New Monthly Average (per english ton)	-	Base Average Terminal Price	x	Total % Asphalt Plus Fuel Allowance

4. The **unit prices per square yard of paver placed surface treat 'Novachip'** material purchased from any award based on this specification will be subject to adjustment based on the following formula:

'Novachip' Adjustment (per sq. yd.)	=	New Monthly Average (per english ton)	-	Base Average Terminal Price	X	.07 (Total % petroleum (7%)	x	0.03

5. The **unit prices per square yard of fiber reinforced surface treatment** material purchased from any award based on this specification will be subject to adjustment based on the following formula:

Fiber reinforced Surface treatment Adjustment (per sq. yd.)	=	New Monthly Average (per english ton) / 235	-	Base Average Terminal Price	x	Total % Asphalt Plus Fuel Allowance	x	0.40

6. The **unit prices per gallon of liquid bituminous asphalt emulsions** material purchased from any award based on this specification will be subject to adjustment based on the following formula:

Price adjustment Per Gallon	=	New Monthly Average (per english ton) / 235	-	Base Average Terminal Price	x	Total Allowable Asphalt & Fuel Allowance

ASPHALT PRICE ADJUSTMENT APPENDIX

NEW MONTHLY AVERAGE F.O.B. TERMINAL PRICE:
The average F.O.B. terminal price for unmodified **PG 64-22** binder without anti-stripping agent as determined by the New York State Department of Transportation per New York State Department of Transportation Standard Specification.

BASE AVERAGE F.O.B. TERMINAL PRICE:
The average F.O.B. terminal price of unmodified PG 64-22 binder without anti-stripping agent as determined by the New York State Department of Transportation.

TOTAL % ASPHALT PLUS FUEL BY MATERIAL TYPE
The percentage of total allowable asphalt and fuel for each item is as follows:

ITEM	% ASPHALT	+ FUEL ALLOWANCE	TOTAL % ASPHALT + FUEL ALLOWANCE
Type MC1 Binder Course	5.75	1	6.75
6.3 mm F2 Polymer Modified	6.7	1	7.7
Flexible Overlay (Smooth Seal)	7	1	8
Flexible Top	6.2	1	7.2
True & Leveling F9, Superpave HMA, (All ESAL)	**	1	*** %
Shim Course F9, Superpave HMA, (All ESAL)	8.25	1	9.25
Top Course 9.5 mm F2 Superpave HMA, (All ESAL)	6.2	1	7.2
Top Course 12.5 mm F2 Superpave HMA, (All ESAL)	5.5	1	6.5
Binder Course 19 mm F9 Superpave HMA, (All ESAL)	4.9	1	5.9
Binder Course 25 mm F9 Superpave HMA, (All ESAL)	4.5	1	5.5
Base Course 37.5 mm F9 Superpave HMA, (< 3 M ESAL's)	4.0	1	5.0
Paver placed surface treatment 'Novachip'	7.00	0	7.00 %
Asphalt Emulsions			
CMS-2	65	12.2	77.2 %
CRS-2	65	3.2	68.2 %
CRS-2p	65	3.2	68.2 %
CSS-1	57	0.2	57.2 %
CSS-1h	57	0.2	57.2 %
RS-2	63	3.2	66.2 %
RS-2p	63	3.2	66.2 %
HFRA	65	5	70%
HFMS-2	65	10.2	75.2 %
HFMS-2gh	75	3	78 %
HFMS-2h	65	3.2	68.2 %
HFRS-2	63	3.2	66.2 %
HFRS-2p	63	3.2	66.2 %
HFMS-2h Tack coat	40	0.2	40.2 %
RS-1h (Rapid breaking tack)	55	0.2	55.2 %
CSS-1h Tack Coat	57	0.2	57.2 %
PG 64-22 (AC-20 w/ fiber crack fill)	95	0	95 %
18-64	100	0	100 %
Polymer Crack fill (ASTM D6690)	56	0	56 %
MC 30	100	2	102%
DEC 50	25	25	50%

** The conversion factor will be computed separately using the conversion factors for the individual mixture used.

ASPHALT PRICE ADJUSTMENT APPENDIX

EXAMPLE: Item Asphalt Hot Top Course 9.5 mm F2 Superpave
Base Average Price = $150.00
New Average Price = $160.00
Total % Asphalt plus Fuel = 6.2%

$160.00 - $150.00 x 0.062 = +$0.62 per English Ton

***Fuel Allowance represents allowance for energy (fuel, electricity, natural gas) used in the production of asphalt. It is a cost associated with the product and not intended to represent any trucking or hauling of product.**

NOTE:

All materials with identical numbers preceding the decimal and identical first and second number after the decimal receive the price adjustment shown for the base material.

Positive Price Adjustment number shall be added to original bid price per English ton.

Negative Price Adjustment number shall be subtracted from original bid price per English ton.

Price adjustments allowed by this contract shall be calculated and applied to the original prices. **There will not be price adjustments unless** the change amounts to more than $.10 per English ton from the original prices for asphalt hot mixes, and $0.011 for asphalt emulsions and 'novachip'. In these instances prices will revert back to the original prices.

All price adjustments will be computed to three decimal places.

Should these provisions result in a price structure which becomes unworkable, detrimental or injurious to the State or in prices which are not truly reflective of market conditions or which are deemed by the Commissioner to be unreasonable or excessive, and no adjustment in price is mutually agreeable, the Commissioner reserves the sole right upon ten days written notice mailed to the contractor to terminate any contract resulting from this bid opening.

Price adjustment shall be published by the State and issued to all contract holders, whose responsibility will be to attach the appropriate state notification (based on when the work was performed) to the payment invoice submitted to agency.

Work performed after the expiration of the contract, where no extension has been granted, resultant from purchase orders placed prior to expiration of the contract will receive the price adjustments in effect the last month of the contract.

Price adjustment for any contracts that are extended will be based on the new average for the month in which the work is done applying the same base established for that contract.

Monroe County Department Of Transportation

2016 Highway Materials Bid Awards (BASE)

Group II

Asphalt Price Adjustment

June 2016 Index

Month	Index $/US Ton
Sept. 2015	521 Base Index
Jan.	N/A
Feb	N/A
Mar	392.00
Apr	382.00
May	377.00
Jun	390.00
Jul	
Aug	
Sep	
Oct	
Nov	
Dec	

ITEM ASPHALT CONCRETE ASPHALT COURSES

June 2016 Index Price = $390 US Ton

MATERIAL	Unit	Barre Stone - **Albion**	Hanson Agreegates - **HF**	Hanson - **McKee Rd**	Hanson Agreegates - **Stafford**	Iroquois Rock - **Brockport**	Iroquois Rock - **Henrietta**	Rochester Asphalt Material - **Gates**	Rochester Asphalt Material - **Penfield**	Rochester Asphalt Material - **Walworth**	Spallina Materials **Mt. Morris**
Type MC1 Binder Course / County #1 Binder	TON	**45.16**	**49.91**	**51.66**	**49.91**	**49.16**	**49.16**	**49.16**	**49.16**	**49.16**	**46.36**
6.3 mm F2 Polymer Modified, (< 0.3 M ESAL's)	TON	**59.91**	**59.91**	No Bid	**59.91**	**60.91**	**60.91**	**60.91**	**60.91**	**60.91**	**58.91**
Flexible Overlay (Smooth Seal)	TON	**51.52**	**53.77**	**55.77**	**53.77**	**54.52**	**54.52**	**54.52**	**54.52**	**54.52**	No Bid
Flexible Top	TON	**52.57**	**52.57**	**54.82**	**52.57**	**52.57**	**52.57**	**52.57**	**52.57**	**52.57**	No Bid
**True & Leveling F9, Superpave HMA, (< 0.3 M ESAL's)	TON	**#VALUE!**	**#VALUE!**	**#VALUE!**	**#VALUE!**	**#VALUE!**	**#VALUE!**	**#VALUE!**	**#VALUE!**	**#VALUE!**	**#VALUE!**
Shim Course F9, Superpave HMA, (< 0.3 M ESAL's)	TON	**60.88**	**59.88**	**61.88**	**59.88**	**57.88**	**57.88**	**57.88**	**57.88**	**57.88**	No Bid
Top Course **9.5 mm** F2 Superpave HMA, (< 0.3 M ESAL's)	TON	**55.57**	**54.82**	**56.57**	**54.82**	**55.57**	**55.57**	**55.57**	**55.57**	**55.57**	**51.32**
Top Course **12.5** mm F2 Superpave HMA, (< 0.3 M ESAL's)	TON	**53.49**	**53.99**	**56.24**	**53.99**	**52.49**	**52.49**	**52.49**	**52.49**	**52.49**	**49.67**
Binder Course **19 mm** F9 Superpave HMA, (< 0.3 M ESAL's)	TON	**47.27**	**51.02**	**52.27**	**51.02**	**47.27**	**47.27**	**47.27**	**47.27**	**47.27**	**45.02**
Binder Course **25 mm** F9 Superpave HMA, (< 0.3 M ESAL's)	TON	**46.80**	**50.80**	**52.05**	**50.80**	**47.80**	**47.80**	**47.80**	**47.80**	**47.80**	No Bid
Base Course **37.5 mm** F9 Superpave HMA, (< 0.3 M ESAL's)	TON	**46.45**	**48.25**	**49.70**	**48.25**	**47.45**	**47.45**	**47.45**	**47.45**	**47.45**	**43.45**

** The conversion factor will be computed separately using the conversion factors for the individual mixture used.

ITEM STONE AGGREGATE (QUARRY)

ITEM #	MATERIAL	UNIT	Barre Stone - Albion	Dolomite - Gates	Dolomite - LeRoy	Dolomite - Ogden	Dolomite - Penfield	Dolomite - Walworth	Hanson Aggregates - Butler	Hanson Aggregates - Clarendon	Hanson Aggregates - HF	Hanson Aggregates - McKee Rd	Hanson Aggregates - Sctsv. Rd	Hanson Aggregates - Stafford	Iroquois Rock - Brockport	Keeler Construction
	5/8" Crushed Stone	Ton	11.50													
	5/8" Crusher Run	Ton	8.45	15.00	7.00		10.00	8.50	11.25	11.25	11.25	15.50	15.50	11.25	8.25	
	#1 Crushed Stone	Ton	11.50	20.00	12.00		14.00	12.25	12.50	12.50	12.50			12.50	12.50	
	#1 Crusher Run	Ton	8.20	15.00	7.00	9.50	9.50	9.00	9.00	9.00	9.00	15.50	15.50	9.00	7.75	
	#2 Crushed Stone	Ton	11.00	20.00	12.00	14.50	14.00	12.25	12.50	12.50	12.50			12.50	12.50	
	#2 Crusher Run	Ton	8.15	15.00	7.00	9.00	9.00	7.50	8.75	8.75	8.75	15.50	15.50	8.75	7.50	
	#3 Crusher Run	Ton	7.90		8.00		9.50	8.00		8.75	8.75			8.75	8.00	
	Crushed Stone Screenings	Ton	11.25		12.00		14.00	12.50			13.00			13.00	13.00	
	#1 Washed Crushed Stone	Ton	11.50	20.50	12.50	14.50	14.50	12.75	12.50	12.50	12.50			12.50	13.00	
	#1A Stone	Ton	12.50	20.00	12.50		14.50	13.00	14.25	14.25	14.25			14.25	13.00	
	3/8" Washed Stone	Ton	11.50		13.00			14.00	14.25		14.25			14.25		
	#1A Washed Stone	Ton	12.50		13.75	15.00	15.00	14.00	14.25	14.25	14.25			14.25	13.50	
	#1B Stone	Ton	11.50		12.00		15.00	12.50	14.25	14.25	14.25			14.25	13.00	
	#1B Washed Stone	Ton	11.50		12.75			13.50	14.25	14.25	14.25			14.25		
	#1 ST Washed Stone	Ton	12.00		13.00				12.50		12.50			12.50		
	#2 Stone	Ton	11.00	20.00	12.00		14.00	12.25	12.50	12.50	12.50			12.50	12.50	
	#2 Washed Stone	Ton	11.00	20.50	12.50	14.50	14.50	12.75	12.50	12.50	12.50			12.50	13.00	
	#3 Stone	Ton	11.25	20.00	12.00		14.00	12.25			12.50			12.50	12.50	
	#4 Stone	Ton	11.25				14.50	12.25								

* Delivery to be done by Keeler Construction. Need Keeler PO.

ITEM STONE AGGREGATE (QUARRY)

ITEM #	MATERIAL	UNIT	Barre Stone - Albion	Dolomite - Gates	Dolomite - LeRoy	Dolomite - Ogden	Dolomite - Penfield	Dolomite - Walworth	Hanson Aggregates - Butler	Hanson Aggregates - Clarendon	Hanson Aggregates - HF	Hanson Aggregates - McKee Rd	Hanson Aggregates - Sctsv. Rd	Hanson Aggregates - Stafford	Iroquois Rock - Brockport	Keeler Construction
	#4A Stone	Ton	11.25		12.00		14.50	12.25								
	#5 Stone	Ton	11.25		14.00											
	Recycled Concrete	Ton	10.00	6.75			6.75						7.25	10.00		
	Stone Filling (Fine)	Ton	12.50						14.00		14.00			14.00		
	Stone Filling (Light)	Ton	12.50		14.00		16.50	14.50	14.00		14.00			14.00	14.50	
	Stone Filling (Medium)	Ton	14.25		16.50	17.50	18.50	16.50		17.00	17.00			17.00	16.50	
	Stone Filling (Heavy)	Ton	16.50		18.50	19.50	20.50	18.00			18.00			18.00	18.50	
	Rip Rap	Ton	35.00		13.50	16.00	16.00	13.50			19.00			19.00	13.50	
	Plant Mixing of Aggregates	Ton														
	Material Hauling (Aggregate Items) 0 to 1 Mile	Ton		3.00	3.00	3.00	3.00	3.00	3.00	3.00	3.00			3.00	3.00	3.00
	Material Hauling (Aggregate Items) > 1 Mile	Ton		0.35	0.35	0.35	0.35	0.35	0.35	0.35	0.35			0.35	0.35	0.40
	Material hauling & loading for Stone Filling (Heavy) ONLY (Additional Charge)	Fixed Price / Ton	12.00	12.00	12.00	12.00	12.00	12.00	12.00	12.00	12.00	12.00	12.00	12.00	12.00	12.00

* Delivery to be done by Keeler Construction. Need Keeler PO.

ITEM STONE AGGREGATE (GRAVEL PIT)

ITEM #	MATERIAL	UNIT	Dolomite - Gates	Dolomite - Palmyra	Dolomite - Penfield	Valley Sand & Gravel - Avon
	5/8" Crushed Stone	TON				
	#1 Crushed Stone	TON		13.00		
	#1 Crusher Run	TON				
	#2 Crushed Stone	TON		13.00		
	#2 Crusher Run	TON				
	Crushed Stone Screenings	TON				
	#1 Washed Crushed Stone	TON		13.00		12.50
	#1A Stone	TON		13.00		12.50
	3/8" Washed Stone	TON				12.50
	#1A Washed Stone	TON	14.50	13.00	14.50	12.50
	#1B Stone	TON				
	#1B Washed Stone	TON				
	#1 ST Washed Stone	TON				
	#2 Stone	TON		13.00		
	#2 Washed Stone	TON	14.50	13.00	14.50	12.50
	Screened Gravel	TON				10.50
	Recycled Concrete	TON				
	Stone Filling (Fine)	TON				
	Stone Filling (Light)	TON				
	Material Hauling (Aggregate Items) 0 to 1 Mile	TON	3.00	3.00	3.00	
	Material Hauling (Aggregate Items) > 1 Mile	TON	0.35	0.35	0.35	

** $/CY

ITEM CONCRETE MIXES DELIVERED

ITEM #	MATERIAL	UNIT	UNIT PRICE	VENDOR
	Concrete for Structures Class A	CY	103.00	Fulmont Ready Mix
	Concrete for Structures Class D	CY	107.00	Fulmont Ready Mix
	Concrete Grouting Material	CY	143.00	Fulmont Ready Mix
	Controlled Low Strength Material	CY	77.00	Fulmont Ready Mix
	Flowable Fill (Pure Waters Blend)	CY	77.00	Fulmont Ready Mix
	ADDITIONAL ITEMS TO BE ADDED TO THE ABOVE BID PRICES **(Fixed Price)**			
	Heat	CY	**$10/CY**	
	Small Load Charge	LOAD	**$65/LOAD**	
	Retarder	CY	**$4/CY**	
	High Early	Min.	**$8/CY**	
	DCI	CY	**$10/CY**	
	Excess waiting time	Min.	**$1/Min.**	

ITEM TOP SOIL, FILL DIRT, SELECT FILL AND VARIOUS SANDS

ITEM #	MATERIAL	UNIT	American Green Landscape	Barre Stone Products	Brenga Supply	Dolomite - Gates	Dolomite - Ogden	Dolomite - Palmyra	Dolomite - Penfield	Greentech - Silverado Dr.	Hanson Aggregates - Victor	Iroquois - Brockport	Macedon Landscaping	Monroe Roadways - Various	Morrison Excavating	R.M. Landscape	Spalding Materials	Tasuk Development	UP Scapes Nursery & Landscape	Valley Sand & Gravel - Avon
	Topsoil - Screened	Ton		12.25													16.00		13.50	
	Topsoil - Screened	CY	21.00		18.00					20.00			19.50	17.50	17.50 & 24.00	20.00 & 25.00		18.00	15.00	
	Topsoil - Unscreened	Ton		11.00													12.50		9.00	
	Topsoil - Unscreened	CY			14.00					10.00				11.00	12.00	14.00		10.00	10.00	
	Compost Topsoil	CY			25.00					35.00						30.00	32.00			
	Fill Dirt Material	Ton		4.75			5.00										4.75		3.50	4.50
	Fill Dirt Material	CY			5.00					5.00								7.00	4.00	
	Select Structural Fill	Ton		8.25													8.00			6.75
	Select Structural Fill	CY																		
	Mortar Sand	Ton		13.50		13.00	13.00	6.00	13.00		17.00						10.50			
	Grout Sand	Ton		13.50													10.50			
	Concrete Sand	Ton		13.50							13.00						13.00			13.00
	Ice Control Sand - Aggregate A	Ton		12.50		13.00		5.50	13.00			13.00					9.00			10.75
	Ice Control Sand - Aggregate B	Ton				13.00		5.50	13.00			13.00					9.00			
	Material Hauling (Aggregate Items) 0 to 1 Mile	Ton				3.00	3.00	3.00	3.00		3.00	3.00			5.00		3.25			
	Material Hauling (Aggregate Items) >1 Mile	Ton				0.35	0.35	0.35	0.35		0.35	0.35			0.60		0.38			
	Material Hauling (Aggregate Items) 0 to 1 Mile	CY			8.00										6.00			6.00		
	Material Hauling (Aggregate Items) >1 Mile	CY			6.00										6.00			6.00		

1 =20 Ton Minimum Load
2 =15 CY Minimum Load
** Dry (Stored Inside)

*** Keeler Construction delivery for Barre Stone Products. Need Keeler PO#.

ITEM VARIOUS CONSTRUCTION ITEMS

ITEM #	MATERIAL	UNIT	UNIT PRICE	VENDOR
	Common Sewer Brick	Ea.	0.42	Miller Brick Co.
	Patio Pavers	Ea.	0.42	Miller Brick Co.
	Highway Common Brick FULL HEIGHT	Ea.	0.42	Miller Brick Co.
	Highway Common Brick HALF HEIGHT	Ea.	0.58	Miller Brick Co.
	Surface Applied Detectable Warning Materials	SF	12.36	J.C. Smith Inc.
	Embedded Preformed Detectable Warning Materials	SF	11.99	The Duke Company
	Detectable Warning Paver Brick	SF	9.00	Allied Building Products
	GRASS SEED & TURF ICE MELTER			
	Grass Seed General Mix (Highway Blend)	50 # Bag	67.36	Fisher & Son Co., Inc.
	Grass Seed Premium Mix (Pure Waters Blend)	50 # Bag	69.89	Fisher & Son Co., Inc.
	Grass Seed Quick Grow / Triple Perennial Ryegrass Mix	50 # Bag	61.32	Fisher & Son Co., Inc.
	Grass Seed Annual Ryegrass	50 # Bag	27.41	Fisher & Son Co., Inc.
	Hydroseed Mulch (Cellulose - Paper)	Lb.	0.19	Fisher & Son Co., Inc.
	Hydroseed Mulch (Wood and Cellulose Fiber Mixture)	Lb.	0.21	Fisher & Son Co., Inc.
	Hydroseed Tackifiers	Lb.	6.93	Fisher & Son Co., Inc.
	Turfline Ice Melter (42 bags / pallet) **ALTERNATE PRODUCT Pro Grade Commercial**	Pallet	428.75	Allied Building Products
	Turfline Ice Melter **ALTERNATE PRODUCT Pro Grade Commercial**	50 # Bag	8.75	Allied Building Products
	MORTOR / CONCRETE MIXES / BLACK BEAUTY			
	Mortar Mix	80 # Bag	5.15	The Duke Company
	Concrete Mix	80 # Bag	4.30	AH Harris
	Portland Cement	94 # Bag	10.79	AH Harris
	Type S Pre Blended Mortar Mix (ASTM C270)	80 # Bag	4.60	J.C. Smith Inc.
	Super 5000 Concrete Mix	80 # Bag	4.45	J.C. Smith Inc.
	Speedcrete RED LINE	50 # Bag	19.20	The Duke Company
	Speedcrete GREEN LINE	50 # Bag	22.00	The Duke Company
	Speedcrete BLUE LINE	50 # Bag	20.50	The Duke Company
	Black Beauty	100 # Bag	11.25	AH Harris/Allied Building Products
	Calcium Chloride (712-02)	50 # bag	10.67	Fisher & Son Co., Inc.

ITEM VARIOUS CONSTRUCTION ITEMS

ITEM #	MATERIAL	UNIT	UNIT PRICE	VENDOR
	POST & FENCING			
	Traffic Sign Posts (Square Tubing) 1 3/4" x 1 3/4" x 10'	Each	19.27	Chemung Supply
	Traffic Sign Posts (Square Tubing) 2" x 2" x 10'	Each	21.80	Chemung Supply
	Traffic Sign Posts (Square Tubing) 2 1/4" x 2 1/4" x 3'	Each	7.56	Chemung Supply
	Green Channel Post	Each	12.27	Eberl Iron Works, Inc.
	Plastic Safety Fence	Each /50 Foot Roll	19.35	The Duke Company
	Polyethylene Snow Fence	Each /50 Foot Roll	82.00	The Duke Company
	Steel Snow Fence Post	Each	5.15	The Duke Company
	GEOTEXTILE FABRICS			
	Biaxial Geogrid Reinforcement Material	SF	0.11	AH Harris
	Geotextile Bedding Fabric	SF	0.14	JC Smith Inc.
	Geotextile Undercut Seperation Fabric	SF	0.07	JC Smith Inc.
	Geotextile Drainage Fabric	SF	0.07	AH Harris / Allied Building / JC Smith Inc.
	Erosion Control Silt Fence ($24/Roll = 300 SF)	SF	0.08	AH Harris
	Turbidity Curtain	SF	2.00	AH Harris
	Sediment Filtration Mat	SF	1.95	JC Smith Inc.
	Silt Filtration Bag	Each	57.00	Allied Building Products
	Geotextile Slope Protection Temporary	SF	0.03	AH Harris
	Geotextile Slope Protection Permanent	SF	0.07	Allied Building Products
	TRAFFIC MAINTENANCE PRODUCTS			
	Centerline Delineators (500 units / Box)	Box	370.00	Eberl Iron Works

ITEM VARIOUS CONSTRUCTION ITEMS

ITEM #	MATERIAL	UNIT	UNIT PRICE	VENDOR
	BRIDGE MAINTENANCE ITEMS			
	Speedcrete 2028	50 # Bag	20.70	The Duke Company
	BITUTHENE 4000 Membrane (3'x66.67' Roll)	SF	0.86	Construction Distribution & Supply
	BITUTANE WP-3000 Primer (5 Gal Pail)	Gal.	350.04	Construction Distribution & Supply
	Woven Polyethelene Nylon Sheets (20' X 100')	Roll	70.00	JC Smith Inc.
	PVC PIPE PRODUCTS (ADS) /DRAINAGE PRODUCTS			
	12" PVC Drain Basin	Each	340.00	ADS
	12" Cast Iron Frame and Hinged Grate	Each	188.00	ADS
	12" PVC Drain Basin & Cast Iron Frame & Hinged Gate	Each	461.00	ADS
	Saddle Tee 4x12	Each	43.79	ADS
	Saddle Tee 4x15	Each	46.52	ADS
	Saddle Tee 4x18	Each	76.07	ADS
	Saddle Tee 4x24	Each	77.87	ADS
	Saddle Tee 4x30	Each	114.97	ADS
	Saddle Tee 4x36	Each	142.94	ADS
	Saddle Tee 6x12	Each	45.57	ADS
	Saddle Tee 6x15	Each	60.60	ADS
	Saddle Tee 6x18	Each	85.32	ADS
	Saddle Tee 6x24	Each	92.74	ADS
	Saddle Tee 6x30	Each	121.31	ADS
	Saddle Tee 6x36	Each	152.74	ADS
	Clay Adapter 3"	Each	1.94	ADS
	Clay Adapter 4"	Each	1.94	ADS
	Clay Adapter 6"	Each	4.99	ADS
	Snap T's 4x4	Each	4.44	ADS
	Snap T's 6x6	Each	9.86	ADS
	Snap T's 6x4	Each	8.02	ADS

HIGHWAY MATERIALS GROUP II

ITEM PREFABRICATED ADJUSTMENT RINGS

STEEL ADJUSTMENT RINGS

Riser Height (In.)	DIAMETER < 26"	26" - 29 3/4"	30" - 39 3/4"	40" - 45"	45 1/8" - 52"	VENDOR
3/4	100.15	106.56	112.97	157.85	206.56	Cross Road Highway Supply
1	100.15	106.56	112.97	157.85	206.56	Cross Road Highway Supply
1 1/4	101.76	108.17	114.58	165.22	213.94	Cross Road Highway Supply
1 1/2	103.36	109.77	116.18	166.18	214.90	Cross Road Highway Supply
1 3/4	104.96	111.37	117.78	169.71	218.42	Cross Road Highway Supply
2	106.56	112.97	119.38	174.54	223.23	Cross Road Highway Supply
2 1/4	108.81	115.22	121.63	181.88	230.60	Cross Road Highway Supply
2 1/2	111.05	117.46	123.87	189.26	237.97	Cross Road Highway Supply
2 3/4	114.58	120.99	127.40	196.63	245.35	Cross Road Highway Supply
3	119.38	125.79	132.21	204.00	252.72	Cross Road Highway Supply
3 1/4	121.63	128.04	134.45	211.37	260.09	Cross Road Highway Supply
3 1/2	126.44	132.85	139.26	218.74	267.46	Cross Road Highway Supply
4	138.62	145.03	151.44	226.44	275.15	Cross Road Highway Supply
4 1/2	143.10	149.51	155.92	234.13	282.85	Cross Road Highway Supply
5	152.72	159.13	165.54	241.82	290.54	Cross Road Highway Supply
5 1/2	187.21	163.62	170.03	249.51	298.23	Cross Road Highway Supply

POLY MANHOLE RINGS

Riser Height (In.)	DIAMETER 24" (1 1/2" seat)	26" (1 1/2" seat)	32" (1 3/8" seat)	VENDOR
1	113.00	113.00	143.00	Cross Road Highway Supply
1 1/2	113.00	113.00	143.00	Cross Road Highway Supply
2	113.00	113.00	143.00	Cross Road Highway Supply

ALUMINUM SIGN BLANKS

SIGN BLANK	THICKNESS Inches	UNIT	UNIT PRICE	VENDOR
Aluminum Sign Blank – 12" X 18" (2 holes)	0.063	Each	2.73	US Standard
Aluminum Sign Blank – 8" X 24" (0 holes)	0.063	Each	2.29	US Standard
Aluminum Sign Blank – 8" X 24" (4 holes)	0.063	Each	2.73	US Standard
Aluminum Sign Blank - 8" X 30" (0 holes)	0.063	Each	2.83	US Standard
Aluminum Sign Blank - 8" X 30" (2 holes)	0.063	Each	3.05	US Standard
Aluminum Sign Blank - 8" X 30" (4 holes)	0.063	Each	3.27	US Standard
Aluminum Sign Blank – 30" Octagon (2 holes)	0.080	Each	13.19	US Standard
Aluminum Sign Blank – 36" Octagon (2 holes)	0.080	Each	18.86	US Standard
Aluminum Sign Blank - 12" X 24" (2 holes)	0.080	Each	4.03	US Standard
Aluminum Sign Blank – 12" x 30" (2 holes)	0.080	Each	5.01	US Standard
Aluminum Sign Blank – 18" X 18" (4 holes)	0.080	Each	4.69	US Standard
Aluminum Sign Blank – 24" X 24" (4 holes)	0.080	Each	8.07	US Standard
Aluminum Sign Blank – 24" X 30" (2 holes)	0.080	Each	9.81	US Standard

SIGN BLANK	THICKNESS Inches	UNIT	UNIT PRICE	VENDOR
Aluminum Sign Blank – 24" X 36" (2 holes)	0.080	Each	11.66	US Standard
Aluminum Sign Blank – 30" X 36" (4 holes)	0.080	Each	14.72	US Standard
Aluminum Sign Blank – 30" X 30" (4 holes)	0.080	Each	12.32	US Standard
Aluminum Sign Blank – 36" X 36" (4 holes)	0.080	Each	17.66	US Standard
Aluminum Sign Blank – 12" X 36" (4 holes)	0.080	Each	6.10	US Standard
Aluminum Sign Blank – 18" X 36" (4 holes)	0.080	Each	9.59	US Standard
Aluminum Sign Blank – 12" X 36" (0 holes)	0.080	Each	5.78	US Standard
Aluminum Sign Blank – 12" X 42" (0 holes)	0.080	Each	12.43	US Standard
Aluminum Sign Blank – 12" X 48" (0 holes)	0.080	Each	7.63	US Standard
Aluminum Sign Blank – 12" X 54" (0 holes)	0.080	Each	8.61	US Standard
Aluminum Sign Blank – 12" X 60" (0 holes)	0.080	Each	9.48	US Standard
Aluminum Sign Blank – 12" X 72" (0 holes)	0.080	Each	11.45	US Standard
Aluminum Sign Blank – 24" X 48" (6 holes)	0.080	Each	15.91	US Standard

ITEM ORGANIC BASED SNOW AND ICE PRODUCTS

OPTION A - Product Furnished and Delivered

PRODUCT NAME	PRODUCT COLOR	% BLEND of Product (w/ Chloride Liquid)	CHLORIDE LIQUID TYPE	UNIT	UNIT PRICE	VENDOR
Magic Minus Zero	Brown	80% Chloride 20% Molasses	Magnesium	Gallon	$1.27	Innovative Municipal Products (US) Inc.
PROMELT ULTRA 2000 INH	Blue	80% Chloride 20% Corn Syrup	Magnesium	Gallon	$1.30	Innovative Municipal Products (US) Inc.
PROMELT ULTRA 1000 INH	Blue	90% Chloride 10% Corn Syrup	Magnesium	Gallon	$1.04	Innovative Municipal Products (US) Inc.
PROMELT ULTRA 26 INH	Clear	26% Chloride	Magnesium	Gallon	$0.79	Innovative Municipal Products (US) Inc.
Ice Ban 40/60	Black	40%	Calcium	Gallon	$0.95	Millennium Roads, LLC
Ice Ban 30/70	Black	30%	Calcium	Gallon	$0.95	Millennium Roads, LLC
Ice Ban 7/93	Black	7%	Calcium	Gallon	$0.95	Millennium Roads, LLC

ITEM ORGANIC BASED SNOW AND ICE PRODUCTS - MIXED

OPTION B - Product Furnished, Delivered and Mixed

PRODUCT NAME	PRODUCT COLOR	% BLEND of Product (w/ Chloride Liquid)	CHLORIDE LIQUID TYPE	UNIT	UNIT PRICE	VENDOR
Ice Ban 40/60	Black	40%	Calcium	Gallon	$1.10	Millennium Roads, LLC
Ice Ban 30/70	Black	30%	Calcium	Gallon	$1.10	Millennium Roads, LLC
Ice Ban 7/93	Black	7%	Calcium	Gallon	$1.10	Millennium Roads, LLC

GENERAL SPECIFICATIONS

MONROE COUNTY PURCHASING & CENTRAL SERVICES

200 COUNTY OFFICE BUILDING
39 WEST MAIN STREET, ROCHESTER, NEW YORK 14614
585-753-1100
mcpurchasing@monroecounty.gov

I. FOREWARD

This document contains the General Specifications of the Monroe County Division of Purchasing and Central Services and supersedes any previous issue. The definitions and conditions contained herein apply to all public bids and contracts awarded by the Monroe County Division of Purchasing and Central Services.

II. DEFINITIONS

Political Subdivision: A municipal corporation, school district, district corporation or board of cooperative educational services.

Bid: An offer to furnish a described commodity or public work at a stated price in accordance with the Proposal and Specifications.

Bidder: Any person, firm or corporation submitting a Proposal to the County.

Commodities: Materials, supplies, equipment and non-professional services.

Contractor: Any Bidder to whom a contract award is made by the Purchasing Manager or the Monroe County Legislature.

Controller: Controller of the County of Monroe.

County: Monroe County.

Group: A classification of Commodities.

Late Bid: A Bid received in the Office of Purchasing and Central Services, whether in person, by mail or delivery service, after the time and date established in the Bid Specifications and legal notice for the Bid opening.

Purchasing Manager: Manager of Purchasing and Central Services for Monroe County.

Notice of Contract Award: The official notification of a Bid award from the Purchasing Manager to the successful Bidder.

Proposal: The form which, when issued by the Purchasing Division, constitutes an invitation to Bid on the commodity or work described therein and which, when completed by the Bidder, constitutes his/her Bid to the County to furnish such commodity or work.

Purchase Order: The official form used by Monroe County when placing an order for materials, equipment, supplies or work with a Contractor and which constitutes a contract between the County and a Contractor.

Specifications: Description of a commodity or work and the conditions for its purchase.

III. PROPOSALS AND BIDS

1. The date and time of Bid opening will be given on the Proposal.

2. All Bids are to be submitted on forms provided by the Purchasing Manager.

3. All Bids must be submitted to the Office of Purchasing and Central Services in a sealed envelope clearly marked with Bid number, title, opening date and time. Bids must not be attached to or enclosed in packages containing Bid samples.

4. All information required by the Proposal and the Specifications must be supplied by the Bidder.

5. Each Bid offered shall be construed in accordance with the Specifications and Proposal. The Bidder must explain all deviations, exceptions and qualifications in detail in the Bid.

6. Bidders shall submit one (1) Bid which shall include alternates, if any. Bidders shall not submit multiple Bids in response to the same Proposal. Multiple Bids from the same Bidder may be grounds for Bid rejection.

7. Prices and information required by the Proposal, except the signature of Bidder, shall be typewritten or printed in ink for legibility. Bids written in pencil may be rejected. The Purchasing Manager may interpret or reject illegible or vague Bids, and the decision shall be final. All signatures must be in ink. Facsimile, printed or typewritten signatures are not acceptable, and the Bid may be rejected.

8. No alteration, erasure or addition to the Specifications or the Proposal shall be made.

9. In all Specifications or Proposals, the words "or equal" are understood to appear after each commodity giving the manufacturer's name, catalog reference or any patented commodity. If Bidding on Commodities other than those specified, Bidder must in every instance give the trade designation of the commodity, manufacturer's name and detailed Specifications of the commodity Bidder proposes to furnish. Otherwise, the Bid will be construed as submitted on the identical commodity described in the Specifications.

10. Used, damaged or obsolete items are not acceptable unless specifically requested and if offered or delivered, shall be rejected and the contract may be cancelled.

11. When Bids are requested on a number of Commodities as a Group, a Bidder desiring to Bid "no charge" on a commodity in the Grouping must so indicate. Otherwise, such Bid will be considered as incomplete and may be rejected. Any Bidder failing to Bid on the minimum number of items specified in the Bid documents may have his/her Bid declared incomplete or nonresponsive, and the Purchasing Manager has the discretion to reject the Bid.

12. The Bidder must insert the price per unit specified and the price extension for each item in the Bid, if required. In the event of a discrepancy between the unit price and the extension, the unit price will govern. If there is a discrepancy in any unit price Bid between the numerical unit prices and the written unit prices, the written unit prices shall govern. Prices must be extended in decimals, not fractions.

13. Prices must be net, including transportation and delivery charges fully prepaid by Contractor to the destination(s) indicated in the Proposal, subject only to a cash discount, if applicable. If the award is to be on any other basis, transportation charges must be prepaid by the Contractor and added to the invoice as a separate item.

14. Bidders are cautioned to verify their Bids before submission, as Bids and amendments to Bids or requests for withdrawal of Bids received by the Purchasing Manager after the time specified for the Bid opening may not be considered.

15. All Bids will be opened and read publicly at the time and place set forth in the Proposal and legal notice thereof.

16. All Bids will be time/date stamped as proof of receipt. Bids received at the Office of Purchasing and Central Services after the time specified for Bid opening will be returned to the Bidder unopened. The Bidder assumes the risk of any delay in the United States Postal Service, in any other delivery service, or in the handling of the Bid by any employee of the County. Whether sent by the United States Postal Service, other delivery service, or by personal delivery, the Bidder assumes the responsibility for having the Bid submitted on time. The time clock located in the Office of Purchasing and Central Services is designated the official timepiece for submission of Bids. **A Late Bid will be rejected and cannot be considered in awarding a contract.**

IV. SAMPLES

17. The Purchasing Manager reserves the right to request a representative sample of the commodity at any time. The sample shall be furnished within the timeframe specified in the Bid package.

18. If in the judgment of the Purchasing Manager, the sample is not in accordance with the requirements stated in the Specifications and the Proposal, the County may reject the Bid; or if an award has been made, cancel the Purchase Order at the expense of the Contractor.

19. When samples are required, failure to submit them in accordance with instructions may be sufficient cause for rejecting a Bid or canceling an award.

20. When an accepted sample exceeds the minimum Specifications, all Commodities delivered will be of the same quality and identity as the sample.

21. Samples must be submitted free of charge and be accompanied by the Bidder's name and address, a statement indicating how and where the sample is to be returned to the Bidder and descriptive literature regarding the commodity. Samples will be returned at the Bidder's expense and risk.

22. All samples are subject to tests in the manner and place designated by the Purchasing Manager. Samples consumed or made useless by testing cannot be returned to the Bidder, and the County will not be responsible for any costs as a result of such testing.

23. Where the sample has not been impaired by testing and the Bidder has failed to indicate the place and mode of return of the sample, it becomes the property of the County at the conclusion of the contract period.

24. Samples may be held by the County during the entire term of the contract for comparison with deliveries.

25. A Proposal may indicate that the commodity to be purchased must be equal to a sample on display in a designated place. Failure on the part of the Bidder to examine such sample shall NOT entitle him/her to any relief from the conditions imposed in the Proposal, Specification and related documents. If feasible, standard samples will be submitted to the Bidder for his/her examination prior to the Bid opening date.

26. Cash discounts will not be considered as a basis for award in any contract.

V. AWARDS

27. The Purchasing Manager reserves the right before making an award, to investigate whether or not the items, qualifications or facilities offered by the Bidder meet the requirements set forth in the Proposal and Specifications and are sufficient to ensure the proper performance of the contract, in the event of award. The Bidder must be prepared, if requested by the Purchasing Manager, to present evidence of experience, ability and financial standing, as well as a statement as to plant, machinery and capacity of the manufacturer for the production and distribution of the commodity on which he/she is bidding. If in the opinion of the Purchasing Manager, it is found that the terms and conditions of the Proposal and the Specifications are not complied with, or that items proposed to be furnished do not meet the requirements or Specifications called for, or that the qualifications, financial standing, facilities or capacities are not satisfactory, the Purchasing

Manager may reject such a Bid. The Purchasing Manager, in no way, is required or obligated to conduct such investigation prior to awarding the contract. It is further understood that if such investigations are made, it in no way relieves the Contractor from fulfilling all requirements and conditions of the contract.

28. Contracts shall be awarded to the lowest responsive and responsible Bidder. Responsiveness is determined by taking into consideration the qualities of the articles proposed to be supplied and their conformity with the Specifications. Responsibility is determined by taking into consideration the Bidder's qualifications and their capacity and ability to meet the terms of the contract, including any historical performance record the Bidder may have with the County.

29. A Bidder may be disqualified from receiving awards if such Bidder or anyone in his/her employ, has previously failed to perform satisfactorily in connection with public bidding or contracts.

30. The Purchasing Manager reserves the right to evaluate and/or reject all Bids in whole or in part and to waive technicalities, irregularities and omissions, if in her judgment, the best interests of the County will be served.

31. The Purchasing Manager reserves the right to make awards within forty-five (45) days after the date of the Bid opening, during which period Bids shall not be withdrawn.

32. If two or more responsible Bidders submit identical Bids as to price, and all other terms and conditions are identical, preference may be given to a Bidder whose place of business is within Monroe County. Otherwise, the Purchasing Manager shall have sole discretion in making the Bid award, or all Bids may be rejected and new Bids sought by re-advertisement.

VI. CONTRACTS

33. All contracts awarded by the Purchasing Manager shall be executory only to the extent that funds are available to each department for the purchase of the work or commodity.

34. All Bids shall be received with the understanding that the acceptance thereof, in writing, by the Purchasing Manager or governing body, shall constitute a contract between the Bidder and the County. The mailing of either a Notice of Contract Award identified by number or of a Purchase Order to the address on the Bid shall be sufficient notice of such acceptance.

35. Unless otherwise specified, the quantities listed in the Proposal are subject to change to conform to department requirements.

36. The County reserves the right to order up to 10% more or 10% less than the quantities called for in the contract. This paragraph shall not apply to estimated quantity contracts. Over runs and under runs shall not exceed 10%.

37. Unless terminated or cancelled by the Purchasing Manager pursuant to the authority vested in such office, contracts will remain in force for the period specified.

38. All Purchase Orders must be in writing and must bear the appropriate contract number and the approval of the Purchasing Manager.

39. No Commodities are to be shipped or delivered until after receipt of an official Purchase Order from the County, unless otherwise authorized in writing by the Purchasing Manager.

40. The Contractor shall not assign, transfer, convey, sublet or otherwise dispose of the contract or his/her right, title or interest therein or his/her power to execute such contract to any other person, company or corporation without the prior consent, in writing, of the Purchasing Manager. (Approval by the Purchasing Manager is not required for the assignment of monies due for contract deliveries. Such assignments should be filed directly with the Purchasing Manager.)

41. No alteration or variation of the terms of the contract shall be valid or binding upon the County unless requested in writing and approved in writing by the Purchasing Manager.

42. Pursuant to the provision of Section 220-A of the New York State Labor Law, as amended, the Contractor (and his/her Sub-Contractors) will be obligated to pay all workers in the covered classes the applicable prevailing wage rates and supplements for the locality where the contract work is executed. The minimum hourly wage rate to be paid the various classes of labor performing work under this contract shall be in accordance with schedules which have been established or may hereafter be established or increased, by the New York State Department of Labor during the contract term.

VII. DELIVERY

43. Delivery must be made as ordered and in accordance with the terms of the contract. Unless otherwise specified, delivery shall be made within thirty (30) days of receipt of Purchase Order by the Contractor. The decision of the Purchasing Manager as to reasonable compliance with delivery terms shall be final. Burden of proof of delay in receipt of Purchase Order shall rest with Contractor.

44. Any extension of time of delivery must be requested in writing by the Contractor and approved in writing by the Purchasing Manager.

45. The County will not schedule any deliveries for Saturdays, Sundays or legal holidays, except Commodities required for daily consumption or where the delivery is an emergency, a replacement or is overdue, in which events the convenience of the County will govern.

46. Commodities shall be securely and properly packed for shipment, storage and stocking in new shipping containers and according to accepted commercial practice, without extra charge for packing cases, bailing or sacks. The container shall remain the property of the County unless otherwise specifically agreed to in the contract.

47. Point of Destination. All deliveries shall be unloaded at the storeroom door of the ordering County department unless otherwise stated in the Proposal or Specifications.

48. Commodities shall be purchased as Freight on Board (FOB) Destination and shall include all shipping, delivery and/or transportation charges. Delivery is not complete until Commodities have been received and accepted by the ordering department.

49. When Commodities are rejected with notice of such rejection having been provided to the Bidder, they must be removed by the Contractor from the premises of the ordering department within five (5) days from notification. Rejected items left longer than five (5) days will be regarded as abandoned, and the County shall have the right to dispose of them as its own property.

VIII. DEPOSITS

50. Unless otherwise expressly indicated, the County will refund the full amount of the specification deposit for one (1) set of Plans and Specifications submitted by each **unsuccessful Bidder** whose Bid is accompanied by the required Bid security, upon the proper return of one (1) set of Plans and Specifications within thirty (30) days of the Bid award or rejection of all Bids.

51. The County will return the full amount of the specification deposit submitted by the **successful Bidder** for one (1) set of Plans and Specifications.

52. **Partial reimbursement**, in an amount equal to the full amount of the deposit for one set of Plans and Specifications per unsuccessful Bidder or non-Bidder less the cost of reproducing the Plans and Specifications (half of the deposit amount) shall be made for the return of all other copies of the Plans and Specifications in good condition within thirty (30) days of contract award or rejection of all Bids.

53. Unless otherwise expressly indicated, bid deposits are considered earnest money of good faith and are retained by the County only until a contract has been awarded; at which time they are returned to all Bidders who submitted Proposals. Failure, on the part of a Contractor, to execute a contract, may result in forfeiture of his/her Bid deposit.

IX. PAYMENTS

54. Payments will be made by the Controller after presentation of an invoice and a properly completed goods receipt and/or voucher by the ordering Department.

55. In any case where a question of non-performance of a contract arises, payment may be withheld in whole or in part at the discretion of the Purchasing Manager. Should the amount withheld be finally paid, a cash discount originally offered may be taken by the County as if no delay in payment had occurred.

56. Any claim against a Contractor may be deducted by the County from any money due him in the same or other transactions. If no deduction is made in such fashion the Contractor shall pay the County the amount of such claim on demand. Submission of a voucher and payment thereof by the County shall not preclude the Purchasing Manager from demanding a price adjustment in any case where the commodity delivered is later found to deviate from the Specifications and Proposal. Any delivery made which does not meet the requirements of the Specifications and Proposal may be rejected or accepted on an adjusted price basis as determined by the Purchasing Manager.

57. Purchases made by the County of Monroe are not subject to State or Local sales taxes or Federal Excise taxes. To satisfy the requirements of New York State Sales Tax, either the Purchase Order issued by an agency or institution of New York State for supplies or equipment or the voucher forwarded to authorize payment for such supplies and equipment will be sufficient evidence that the sale by a Contractor was made to the County of Monroe, an exempt organization under §1116 (a) (1) of the New York Tax Law. Exemption certificates for Federal Excise taxes will be furnished upon request by the Purchasing Division. No person, firm or corporation is, however, exempt from paying New York State Truck Mileage, Unemployment Insurance or Federal Social Security Taxes. This exemption does not apply to materials not incorporated into the work of a Public Works Contract.

X. GUARANTEES BY CONTRACTOR

58. Contractor hereby guarantees:

    (a) To hold the County, its agents and employees, harmless from any liability imposed upon the County arising from the negligence, either active or passive, of the Contractor, as well as for the use of any copyrighted or un-copyrighted composition, secret process, patented or unpatented invention, article or appliance furnished or used in the performance of the contract of which the Contractor is not the patentee, assignee or licensee.

    (b) To pay for all permits, New York licenses and fees and to give all notices and comply with all laws, ordinances, rules and regulations.

    (c) That the equipment offered is standard new equipment, latest model of regular stock product with all parts regularly used with the type of equipment offered; also, that no attachment or part has been substituted or applied contrary to manufacturer's recommendations and standard practice. Every unit delivered must be guaranteed against faulty material and workmanship for a period of one year unless otherwise specified.

59. Statement of Non-collusion in Bids and Proposals to Political Subdivisions of the State (NY GML 103-d)

    1. Every Bid or Proposal hereafter made to a Political Subdivision of the state or any public department, agency or official thereof where competitive bidding is required by statute, rule, regulation or local law, for work or services performed or to be performed or goods sold or to be sold, shall contain the

following statement subscribed by the Bidder and affirmed by such Bidder as true under the penalties of perjury:

Non-collusive Bidding Certification.

(a) By submission of this Bid, each Bidder and each person signing on behalf of any Bidder certifies, and in the case of a joint Bid each party thereto certifies as to its own organization, under penalty of perjury, that to the best of knowledge and belief:

(1) The prices in this Bid have been arrived at independently without collusion, consultation, communication or agreement, for the purpose of restricting competition, as to any matter relating to such prices with any other Bidder or with any competitor;

(2) Unless otherwise required by law, the prices which have been quoted in this Bid have not been knowingly disclosed by the Bidder and will not knowingly be disclosed by the Bidder prior to opening, directly or indirectly, to any other Bidder or to any competitor; and

(3) No attempt has been made or will be made by the Bidder to induce any other person, partnership or corporation to submit or not to submit a Bid for the purpose of restricting competition.

(b) A Bid shall not be considered for award nor shall any award be made where (a) (1) (2) and (3) above have not been complied with; provided however, that if in any case the Bidder cannot make the foregoing certification, the Bidder shall so state and shall furnish with the Bid a signed statement which sets forth in detail the reasons therefore. Where (a) (1) (2) and (3) above have not been complied with, the Bid shall not be considered for award nor shall any award be made unless the head of the purchasing unit of the Political Subdivision, public department, agency or official thereof to which the Bid is made or his designee, determines that such disclosure was not made for the purpose of restricting competition.

The fact that a Bidder (a) has published price lists, rates or tariffs covering items being procured, (b) has informed prospective customers of proposed or pending publication of new or revised price lists for such items; or

(c) Has sold the same items to other customers at the same prices being bid, does not constitute, without more, a disclosure within the meaning of subparagraph one (a).

2. Any Bid hereafter made to any political subdivision of the state or any public department, agency or official thereof by a corporate Bidder for work or services performed or to be performed or goods sold or to be sold, where competitive bidding is required by statute, rule, regulation, or local law, and where such Bid contains the certification referred to in subdivision one of this section, shall be deemed to have been authorized by the board of directors of the Bidder, and such authorization shall be deemed to include the signing and submission of the Bid and the inclusion therein of the certificate as to non-collusion as the act and deed of the corporation.

60. Anti-discrimination Clause

During the performance of this contract, the Contractor agrees as follows:

(a) The Contractor will not discriminate against any employee because of race, creed, color, sex or national origin and will take affirmative action to insure that they are afforded equal employment opportunities without discrimination because of race, creed, color, sex or national origin. Such action shall be taken with reference but not be limited to: recruitment, employment, job assignment, promotion, upgrading, demotion, transfer, layoff or termination, rates of pay or other forms of compensation and selection for training or retraining, including apprenticeship and on-the job training.

(b) The Contractor will send to each labor union or representative of workers with which he has or is bound by a collective bargaining or other agreement or understanding, a notice, to be provided by the New York State Division of Human Rights, advising such labor union or representative of the Contractor's agreement under clauses (a) through (g) hereinafter called "non-discrimination clauses." If the Contractor was directed to do so by the contracting agency as part of the Bid or negotiation of this contract, the Contractor shall request such labor union or representative to furnish him with a written statement that such labor union or representative will not discriminate because of race, creed, color, sex or national origin and that such labor union or representative either will affirmatively cooperate, within the limits of its legal and contractual authority, in the implementation of the policy and provisions of these non-discrimination clauses or that it consents and agrees that recruitment, employment and the terms and conditions of employment under this contract shall be in accordance with the purposes and provisions of these non-discrimination clauses. If such labor union or representative fails or refuses to comply with such a request that it furnish such a statement, the Contractor shall promptly notify the New York State Division of Human Rights of such failure or refusal.

(c) The Contractor will post and keep posted in conspicuous places, available to employees and applicants for employment, notices to be provided by the New York State Division of Human Rights setting forth the substance of the provisions of clauses (a) and (b) and such provisions of the State's laws against discrimination as the New York State Division of Human Rights shall determine.

(d) The Contractor will state, in all solicitations or advertisements for employees placed by or on behalf of the Contractor, that all qualified applicants will be afforded equal employment opportunities without discrimination because of race, creed, color, sex or national origin.

(e) The Contractor will comply with the provisions of the Human Rights Law of the State of New York as set forth in section 290-301 of the Executive Law of New York. Contractor will furnish all information and reports deemed necessary by the State Division of Human Rights under these non-discrimination clauses and such sections of the Executive Law and will permit access to said books, records and accounts by the State Division of Human Rights, the Attorney General and the Industrial Commissioner for purposes of investigation to ascertain compliance with these non-discrimination clauses and such sections of the Executive Law and applicable Federal Civil Rights Laws.

(f) This contract may be forthwith cancelled, terminated or suspended, in whole or in part by the contracting agency upon the basis of a finding made by the New York State Division of Human Rights that the Contractor has not complied with these non-discrimination clauses and the Contractor may be declared ineligible for future contracts made by or on behalf of the State or a public authority or agency of the State, until Contractor satisfies the New York State Division of Human Rights that he/she has established and is carrying out a program in conformity with the provisions of these non-discrimination clauses. Such finding shall be made by the New York State Division of Human Rights after conciliation efforts by the Commission have failed to achieve compliance with these non-discrimination clauses and after a verified complaint has been filed with the Division, notice thereof has been given to the Contractor and an opportunity has been afforded him/her to be heard publicly before three members of the Division. Such sanctions may be imposed and remedies invoked independently of or in addition to sanctions and remedies otherwise provided by law.

(g) The Contractor will include the provisions of clauses (a) through (f) in every subcontract or Purchase Order in such a manner that such provisions will be binding upon each subcontractor or vendor as to operations to be performed within the State of New York. The Contractor will take such action in enforcing such provisions of such subcontract or Purchase Order as the contracting agency may direct; including sanctions or remedies for non-compliance. If the Contractor becomes involved in or is threatened with litigation with a subcontractor or vendor as a result of such direction by the contracting agency, the Contractor shall promptly so notify the Attorney General, requesting him to intervene and protect the interests of the State of New

York.

61. Workers' Compensation. Contractor will secure Workers' Compensation and keep insured during the life of the contract for the benefit of such employees as are required to be insured by the provisions of Chapter 41 of the Laws of 1914, as amended, known as the Workers' Compensation Law and also provisions of Article 9 of the Workers' Compensation Law known as the Disability Benefits Law. The contract shall be void and of no effect unless the Contractor complies with these provisions.

XI. CANCELLATION OF CONTRACT

62. Upon failure of the Contractor to deliver within the time specified or failure to make prompt replacement of rejected Commodities when so requested, the Purchasing Manager may purchase from other sources to replace the commodity rejected or not delivered. On all such purchases, the Contractor agrees to reimburse the County promptly for costs associated with purchasing from other sources. Should the cost be less than the contract price, the Contractor shall have no claim to the difference. Such purchases may be deducted from contract quantity by the Purchasing Manager.

63. A contract may be cancelled at the Contractor's expense upon forty-five (45) days written notice by the County or immediately upon nonperformance of the contract, whichever is in the best interest of the County.

XII. DRAWINGS

64. Rough and/or shop drawings shall be furnished as deemed necessary and required by the Specifications. Such drawings shall be consistent with the contract documents and shall be considered as forming part of the Specifications and the contract to which they relate.

65. All lettering on the drawings shall be considered a part of the drawings.

66. Approval by the Purchasing Manager of shop drawings or details for any commodity will not relieve the Contractor from responsibility for furnishing same of proper dimension, size, quantity and quality to efficiently perform the work and carry out the requirements and intent of the layout or descriptive drawings forming part of the Proposal and Specifications. Such approval shall not relieve the Contractor from responsibility for errors of any sort in the shop drawings. If the shop drawings deviate or are intended to deviate from the layout or descriptive drawings on Specifications, the Contractor shall so advise the Purchasing Manager in writing at the time the shop drawings are submitted, stating the difference in value between the contract requirements and that denoted by said shop drawings.

67. Rough and/or shop drawings will be examined by the Purchasing Manager and if necessary, will be returned to the Contractor for correction. After the corrections have been made, the Contractor shall resubmit to the Purchasing Manager as many copies as required for final approval.

68. All drawings and copies thereof shall become the property of the County.

XIII. CONTRACTS INVOLVING INSTALLATION

69. Contractor shall clean up and remove all debris and rubbish resulting from his/her work from time to time as required or directed. Upon completion of the work the premises shall be left in a neat unobstructed condition, the buildings broom clean and everything in satisfactory repair and order.

70. Equipment, supplies and materials shall be stored at the site only upon the approval of the user department and at the Contractor's risk. In general, such on-site storage should be avoided to prevent possible damage or loss of the materials.

71. Work shall be performed so as to cause the least inconvenience to the County and with proper consideration for the rights of other Contractors or workmen. The Contractor shall keep in touch with the

entire operation and install his/her equipment promptly.

72. Installation shall also include furnishing of any rigging necessary to move equipment into the buildings, also the removal and resetting of any removable windows used for moving equipment into building.

73. Bidders shall acquaint themselves with conditions to be found at the site and shall assume all responsibility for placing and installing the equipment in the locations required.

74. All materials used in installation shall be of the highest quality and shall be free from all defects which would mar the appearance of the equipment or render it structurally unsound.

75. Contractor shall furnish adequate protection from damage for all work and shall repair damages of any kind for which he/she or his/her workmen are responsible.

XIV. PERFORMANCE

76. The Contractor shall not be responsible for any losses resulting from his/her failure to perform properly, if such failure was due to causes beyond his/her control and without his/her fault or negligence, including but not restricted to acts of God, wars, acts of public enemies, strikes, fires and floods, provided that the Contractor shall within ten (10) days from the beginning of any such delay, notify the Purchasing Manager, in writing, of the cause of such delay.

77. The terms, conditions and requirements set forth in these General Specifications shall be binding upon Bidders and Contractors submitting Bids or furnishing materials in connection with Proposals received or contracts awarded by the County pursuant to Purchasing Procedures promulgated by the Purchasing Manager.