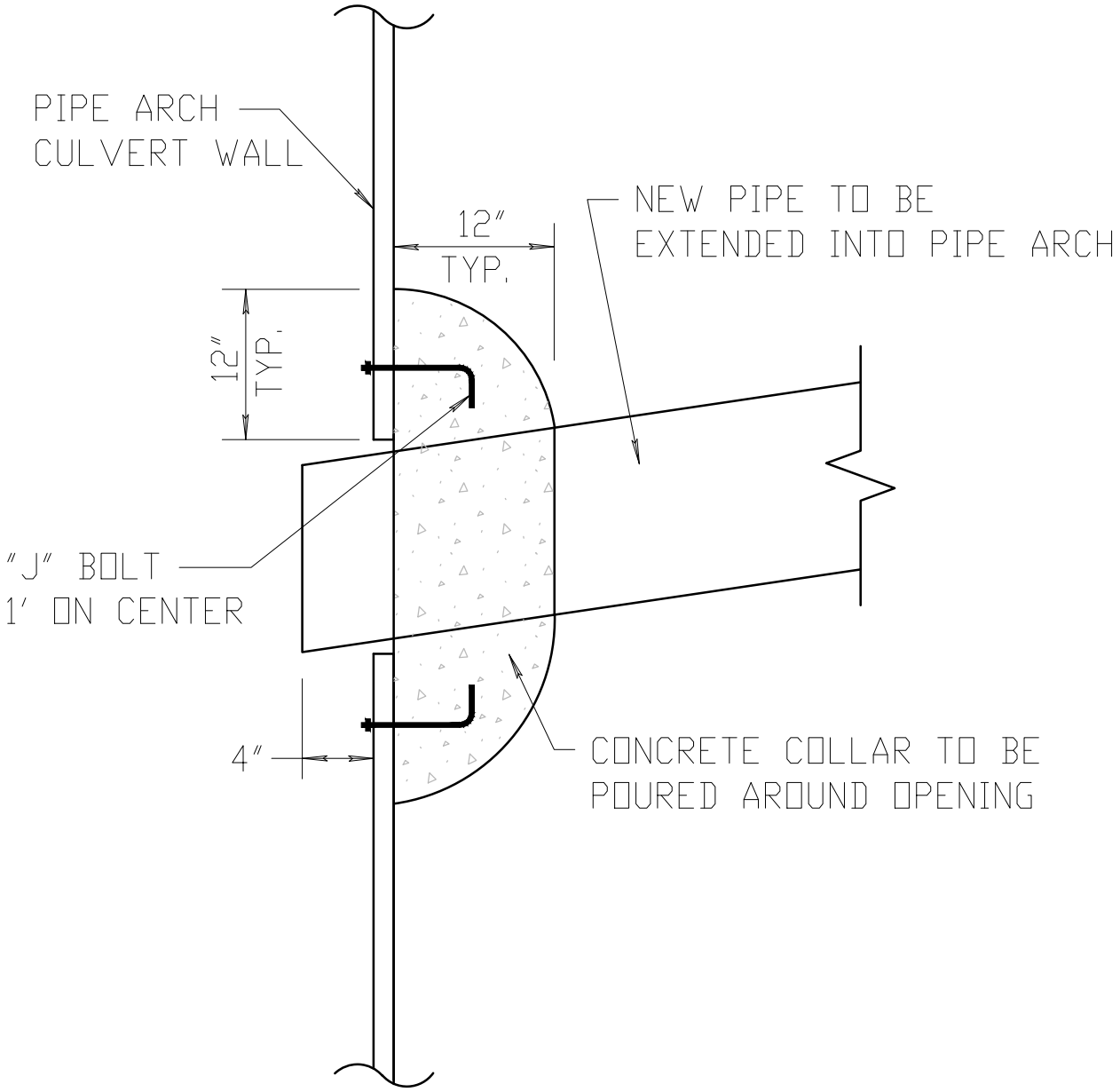

CONCRETE COLLAR

NOT TO SCALE

8/29/13

REVISED