REVISED 8/30/13

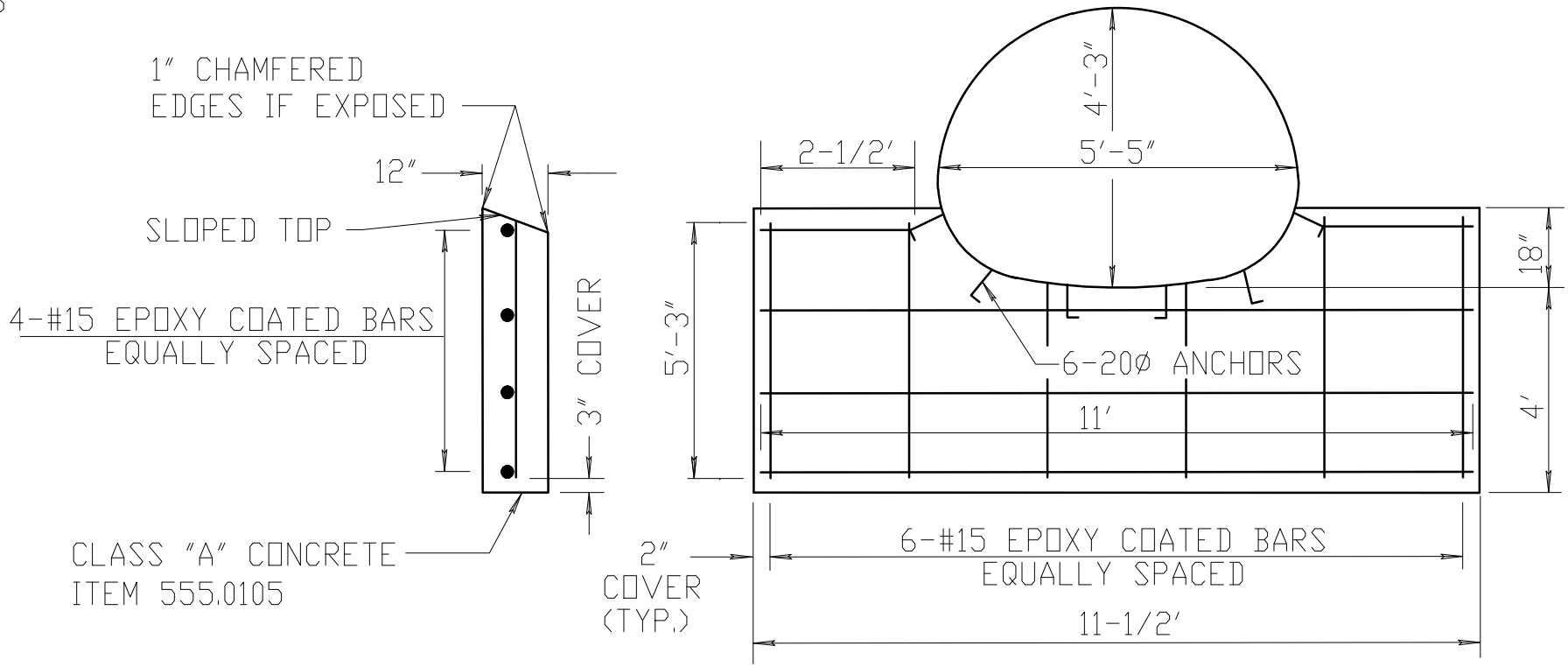

CUTOFF WALL

NOT TO SCALE