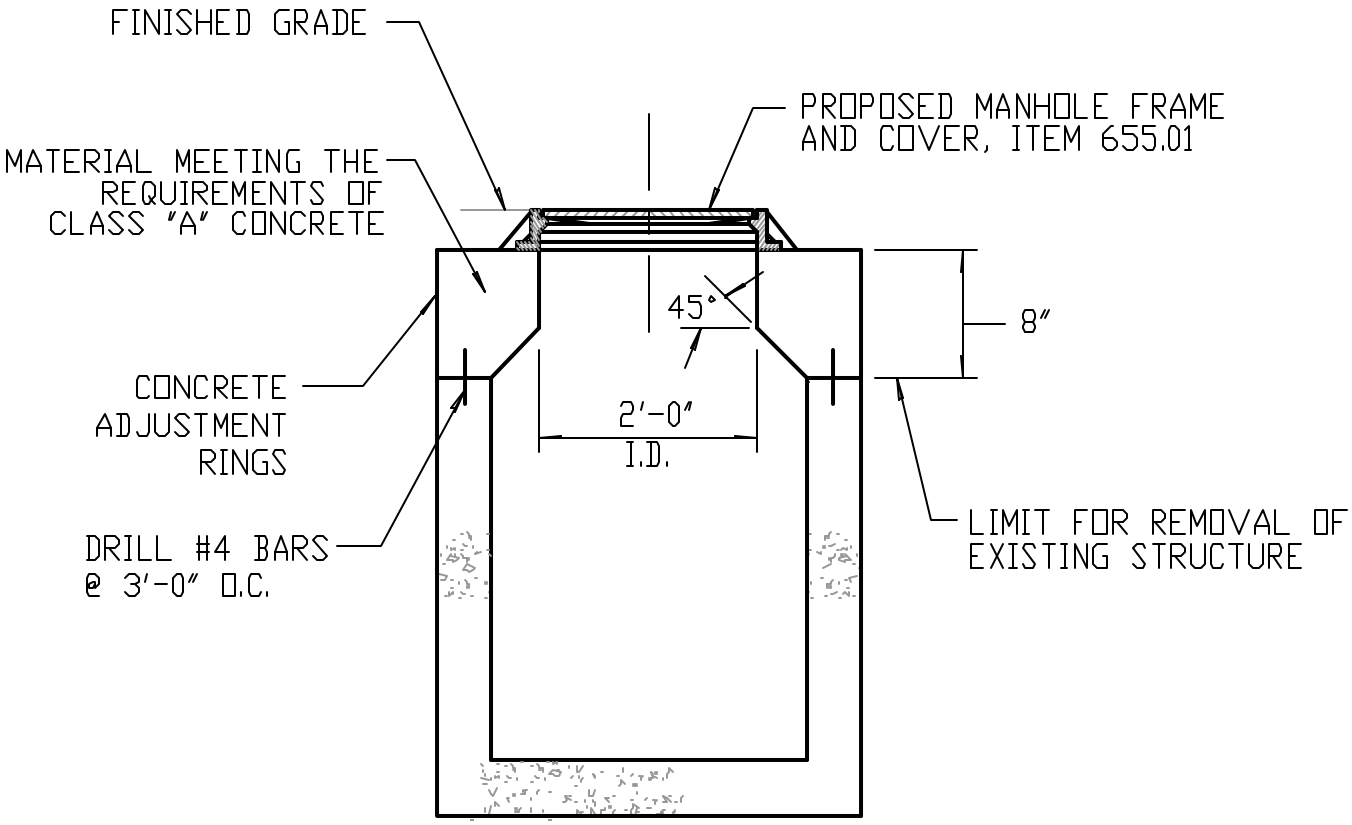

SECTION A-A

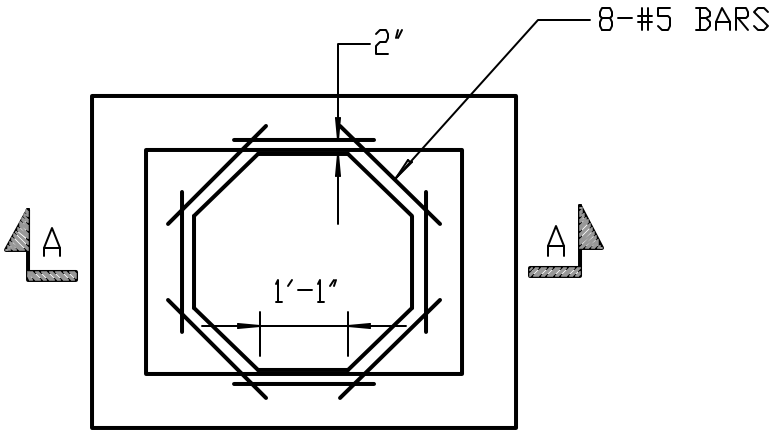

PLAN

ALTER EXISTING D.I. TO TYPE 'A' MANHOLE

ITEM 604.07

NOT TO SCALE

2/14/03

REVISED