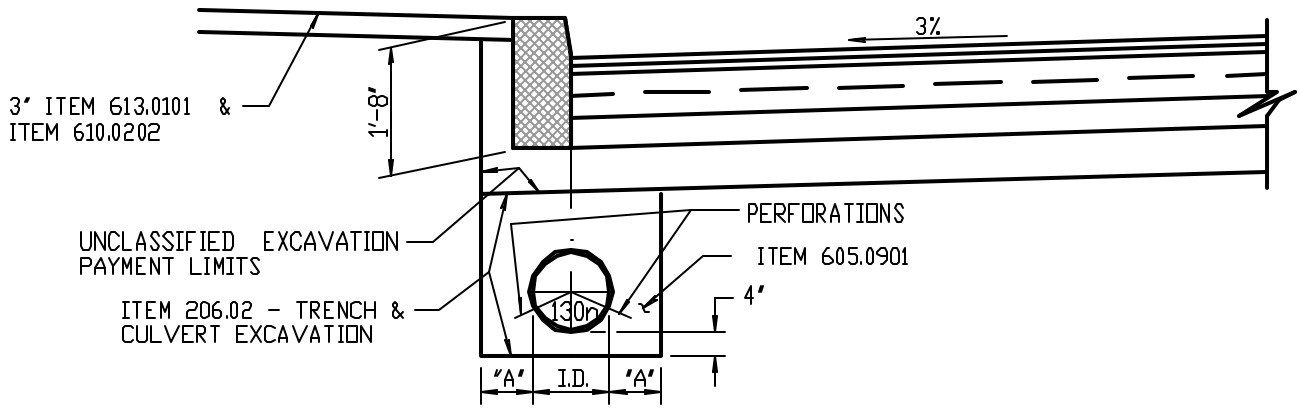

PIPE DIA.	DIM. "A"
UP TO 1'-6"	1'-0"
1'-7" TO 3'-0"	1'-7"
OVER 3'-0"	2'-0"

CURB WITH PERFORATED STORM SEWER

NOT TO SCALE

1/1/01

REVISED