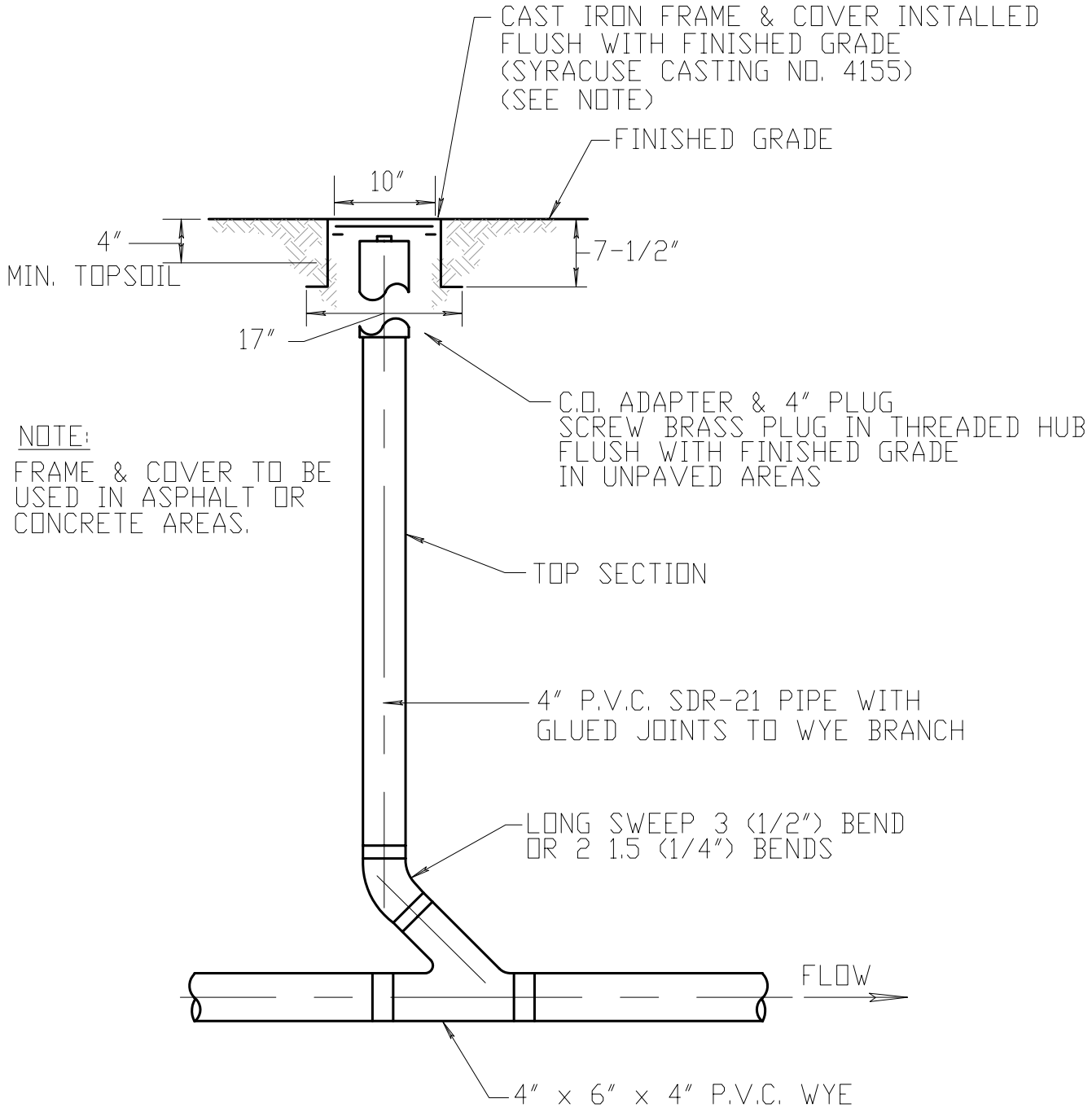

CLEANOUT IN-LINE

NOT TO SCALE

3/1/06

REVISED