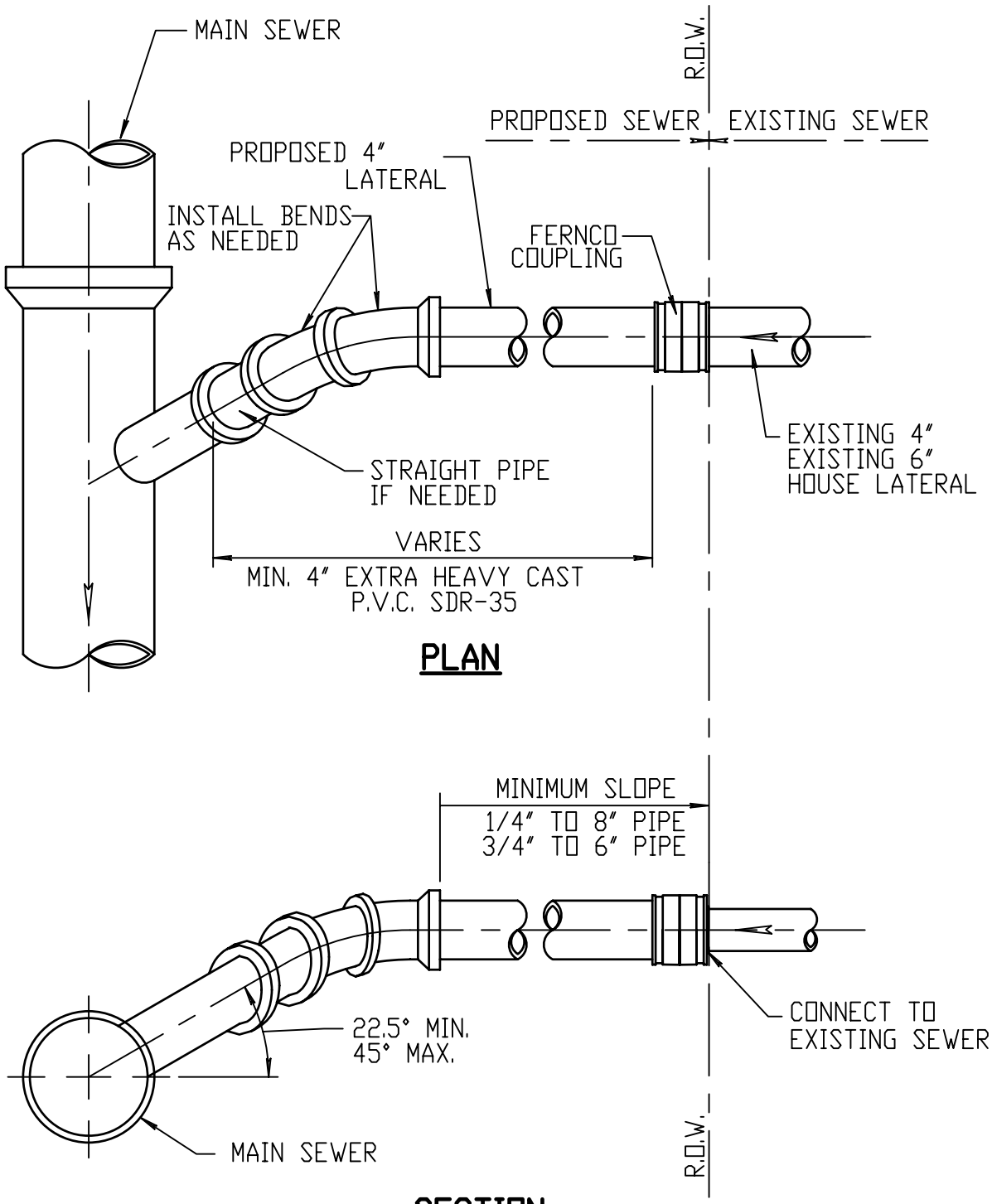

SANITARY SEWER WYE BRANCH CONNECTION

NOT TO SCALE

4/1/98

REVISED