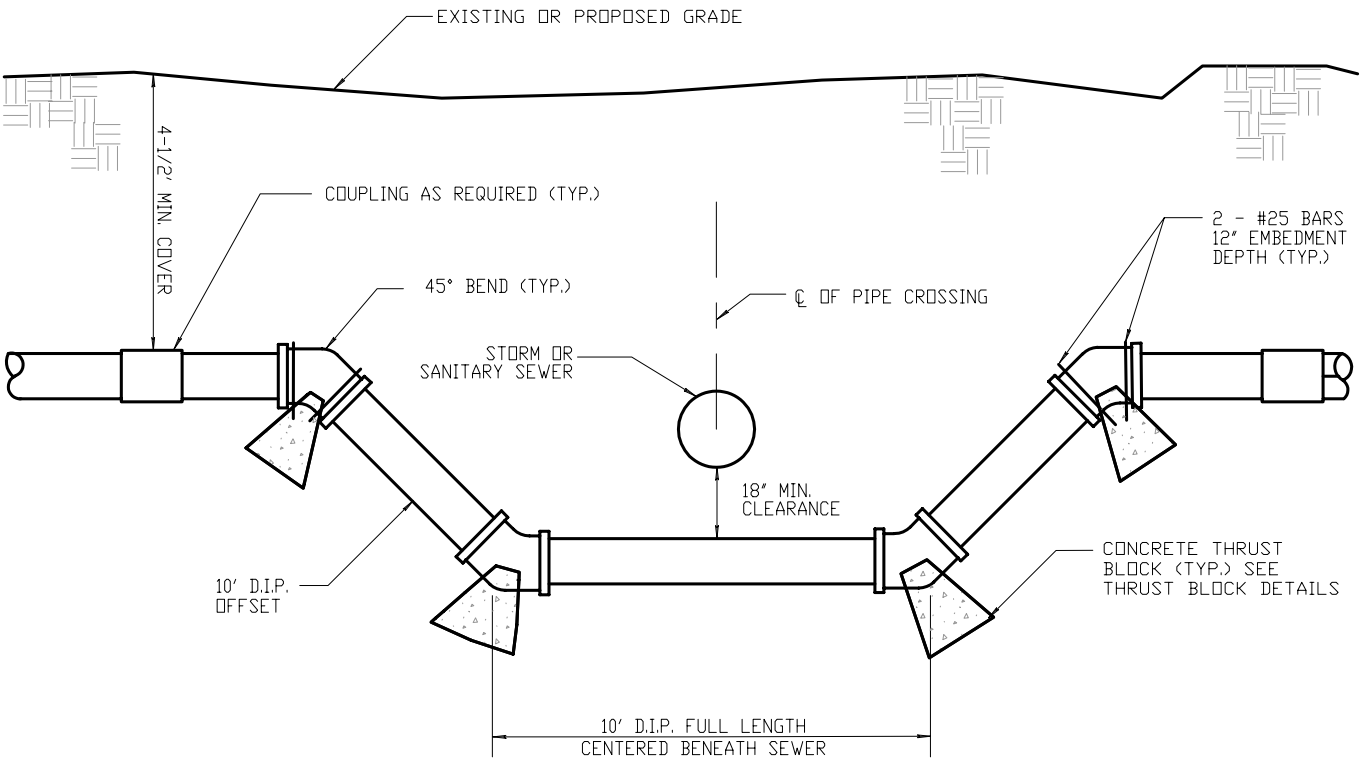

WATERMAIN - SEWER CROSSING

ITEM 660.99

NOT TO SCALE

3/1/06

REVISED