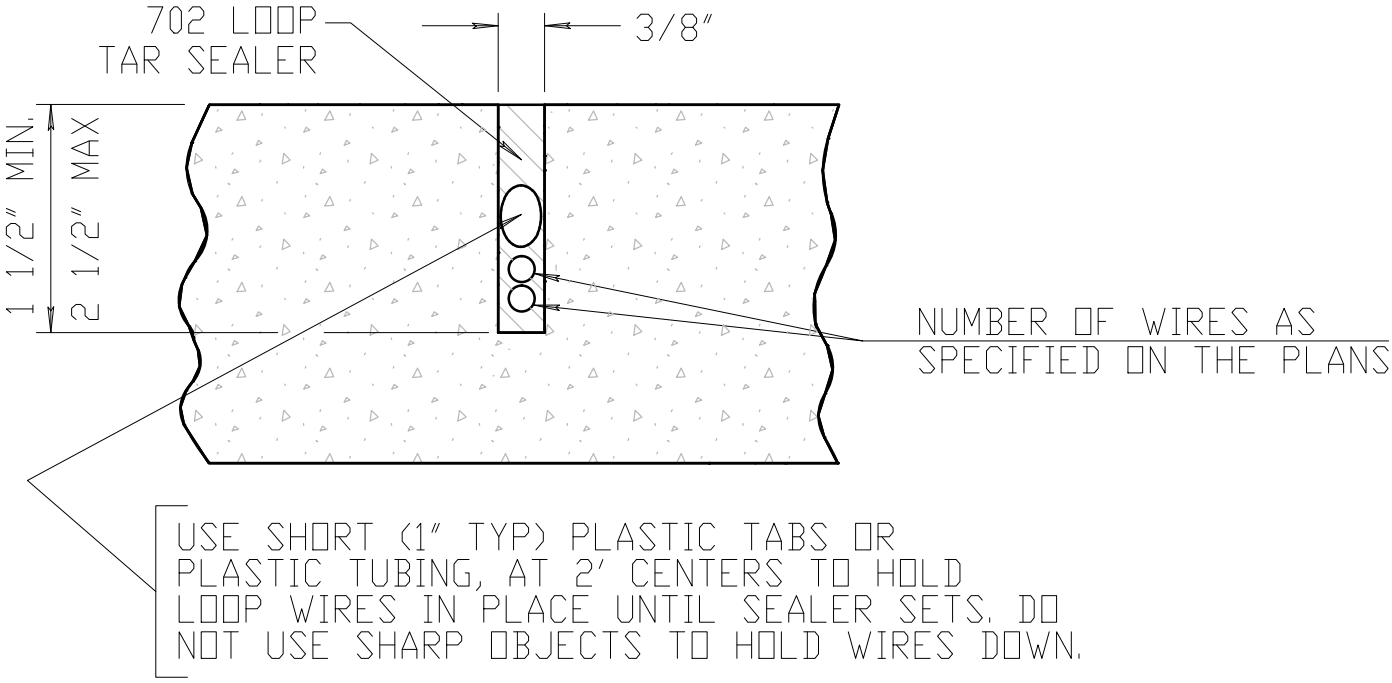

INDUCTANCE LOOP SAW CUT IN CONCRETE OR ASPHALT TOP

NOT TO SCALE

7/18/13

REVISED