REVISED

4/1/98

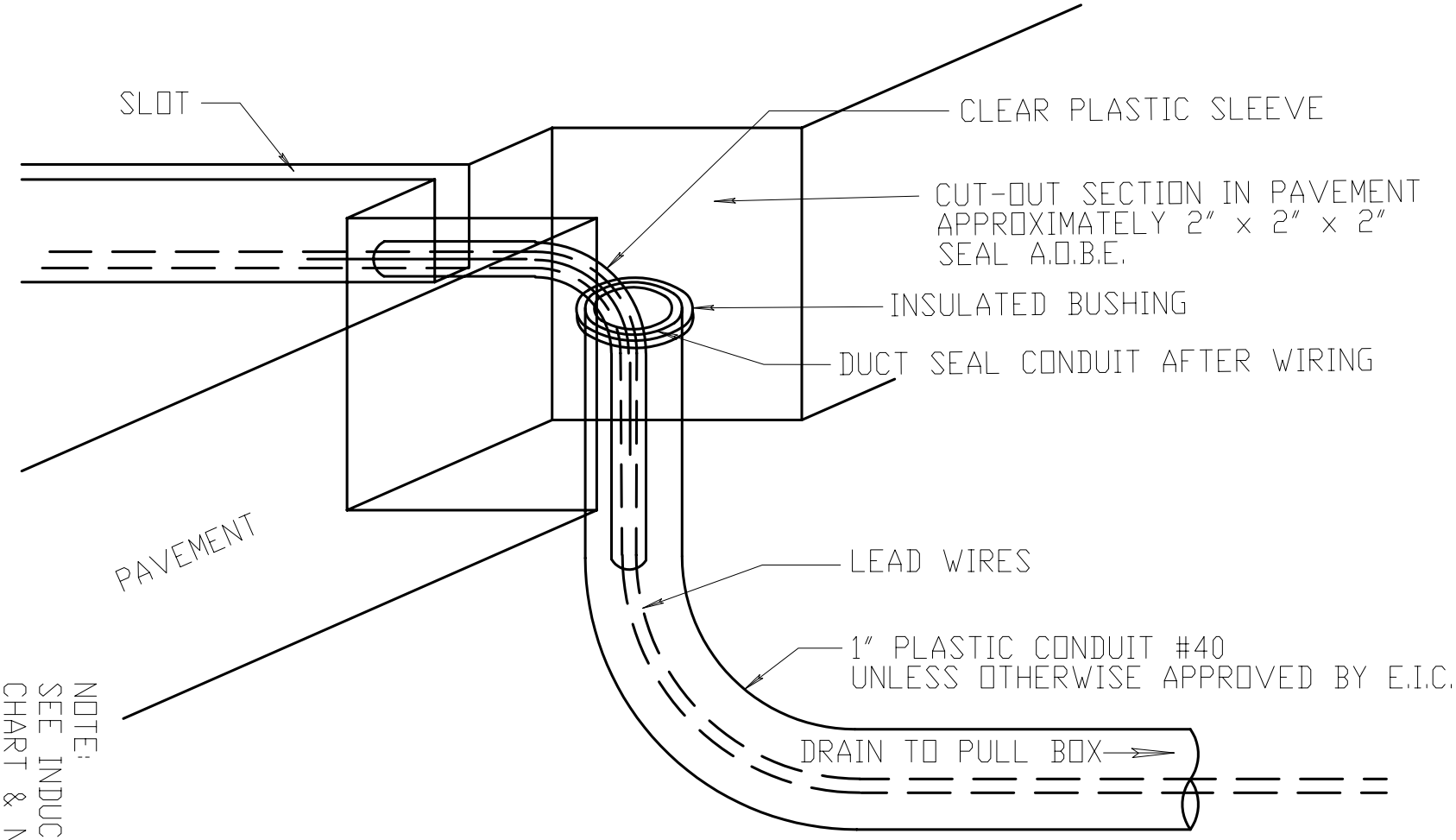

NOTE:
SEE INDUCTANCE LOOP
CHART & NOTES FOR
LOOP DETECTOR NOTES.

LOOP DETECTOR IN CURB SECTION

NOT TO SCALE