REVISED 7/16/13

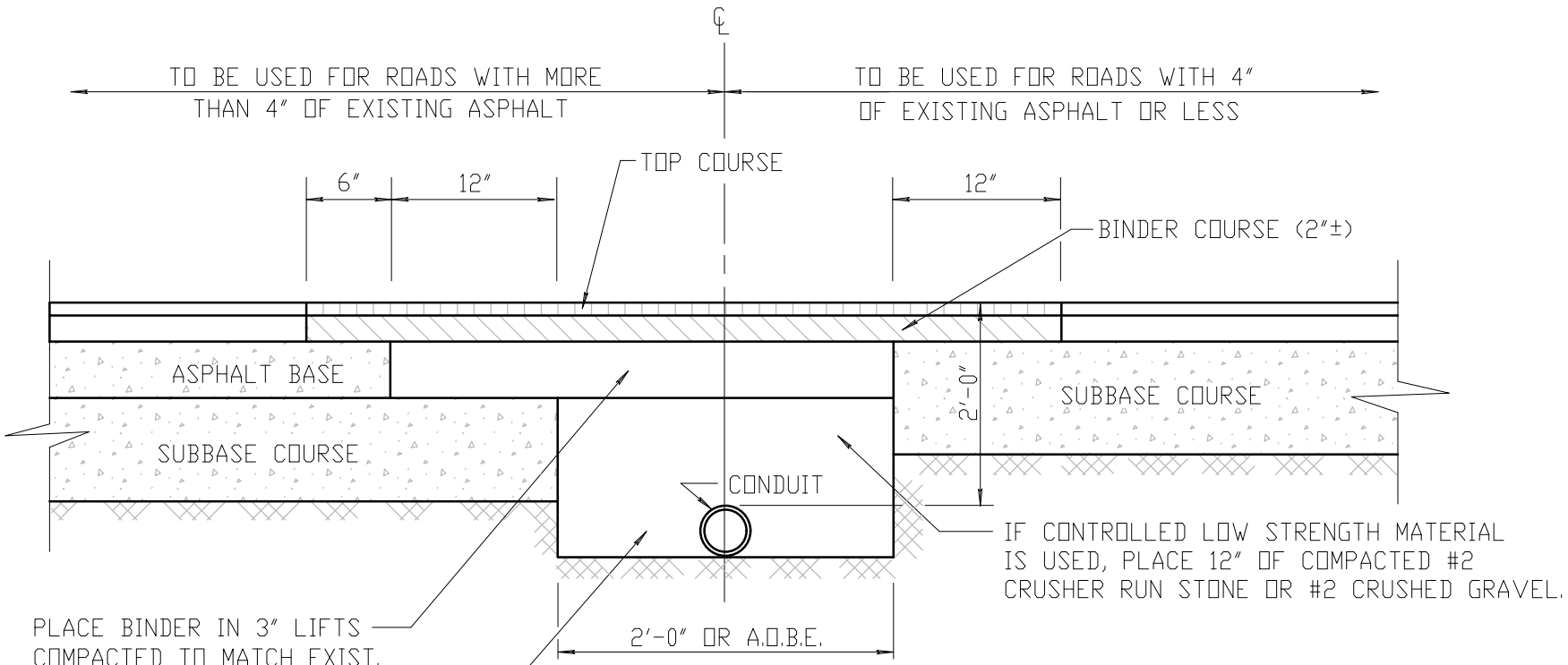

NOTES:

1. ALL JOINTS TO BE SAW-CUT AND TACK-COATED.
2. EXCAVATION LINES FOR EITHER SINGLE OR DOUBLE CONDUIT RUNS.

SIGNAL CONDUIT INSTALLATION - PAVEMENT RESTORATION

NOT TO SCALE